MHC-300

SERVICE MANUAL

US Model

- MHC-300 is composed of following models. As for the service manual it is issued for each component model, then, please refer to it.

COMPONENT MODEL NAME FOR MHC-300

AMPLIFIER, CD, TUNER	HCD-H300
SPEAKER SYSTEM	SS-H1600L

SPECIFICATIONS

Power requirements	120V AC, 60Hz
Power consumption	80 watts
Dimensions	Approx. 225×125×265 mm (w/h/d) ($8\,^{7}/_{8}\times5\times10\,^{1}/_{2}$ inches)
Weight	Approx. 4.5kg (9 lb 15 oz)

Design and specifications subject to change without notice.

Note

This appliance conforms with EEC Directive 87/308/EEC regarding interference suppression.

MINI HI-FI
COMPONENT SYSTEM

SONY®

ACCESSORY & PACKING MATERIAL

Ref.No.	Part No.	Description	Remark
	1-465-707-11	REMOTE COMMANDER (RM-S160)	
	1-501-374-11	ANTENNA, LOOP	
	3-707-584-11	COVER, BATTERY (REMOTE COMMANDER)	
	4-943-847-01	CUSHION, UPPER (HCD-H300)	
	4-943-848-01	CUSHION, LOWER (HCD-H300)	
	* 4-950-318-01	INDIVIDUAL CARTON	
	1-559-984-11	CORD, SPEAKER CONNECTION	
	⚠ 1-575-706-11	CORD, POWER	
	3-754-599-21	MANUAL, INSTRUCTION (ENGLISH)	
	* 4-944-059-01	CUSHION (SS-H1600L)	
	* 4-920-151-02	SHEET, PROTECTION (SS-H1600L)	

• Items marked " * " are not stocked since they are seldom required for routine service. Some delay should be anticipated when ordering these items.

Note: The components identified by mark ⚠ or dotted line with mark ⚠ are critical for safety. Replace only with part number specified.

Sony Corporation
Audio Group

English
91L1832-1
Printed in Japan
©1991. 12
Published by Customer Relations and Service Group

9-956-842-11

HCD-H300

SERVICE MANUAL

US Model

This set is the tuner, CDP and amplifier section in MHC-300.

- HCD-H300 is a model which has been designed based on the HCD-H1600. The major different points of them are the mechanical parts.
- The electrical specifications of this model are almost identical to those of HCD-H1600. This manual contains only the points which differ from HCD-H1600.
- Refer to the HCD-H1600 Service Manual for related information not contained in this manual.

Model Name Using Slimar Mechanism	HCD-H1700
CD Mechanism Name	CDM13B-5BD4A
Base Unit Name	BU-5BD4A

SPECIFICATIONS

Tuner Section (HCD-H300)

System: FM stereo, FM/AM superheterodyne tuner

FM tuner section

Tuning range: 87.5 – 108 MHz

Antenna terminals: 75 ohms unbalanced

Intermediate frequency: 10.7 MHz

AM tuner section

Tuning range: 530 – 1,710 kHz (with the AM tuning interval set at 10 kHz)
531 – 1,710 kHz (with the AM tuning interval set at 9 kHz)

Antenna: AM loop antenna
External antenna terminals

Intermediate frequency: 450 kHz

Amplifier Section (HCD-H300)

Continuous RMS power output: 30 + 30 watts (6 ohms at 1 kHz, 5% THD)

Inputs: MIX MIC (minijack): sensitivity 1 mV, impedance 600 ohms
DAT IN: sensitivity 450 mV, impedance 47 kilohms
VIDEO/AUX (phono jacks): sensitivity 450 mV, impedance 47 kilohms

Outputs: HEADPHONES (stereo minijack): accepts headphones of 8 ohms or more
SPEAKER: accepts speakers of 6 to 16 ohms

Compact Disc Player Section (HCD-H300)

System: Compact disc digital audio system

Laser: Semiconductor laser (λ = 780 nm)
Emission duration continuous

Signal to noise ratio: More than 90 dB

Dynamic range: More than 90 dB

Harmonic distortion: Less than 0.05% (at 1 kHz)

Channel separation: More than 90 dB

MINI HI-FI COMPONENT SYSTEM

SONY®

EXPLODED VIEWS

PAGE	HCD-H1600	HCD-H300
32	No. Part No. Description 1 X-4941-581-1 PANEL ASSY, FRONT 7 * A-4341-660-A PANEL BOARD, COMPLETE 13 * 4-944-211-11 PANEL BACK	Part No. Description X-4942-291-1 PANEL ASSY, FRONT * A-4347-418-A PANEL BOARD, COMPLETE * 4-944-211-31 PANEL BACK
32	56 * A-4345-819-A MAIN BOARD, COMPLETE	* A-4347-419-A MAIN BOARD, COMPLETE
34	102 A-4604-752-A HOLDER (MG) ASSY	A-4604-752-B HOLDER (MG) ASSY
35	155 * A-4617-759-A BD BOARD, COMPLETE	* A-4617-936-A BD BOARD COMPLETE

ELECTRICAL PARTS LIST

40	CN101 1-566-859-11 SOCKET, CONNECTOR 15P IC305 8-759-154-82 IC UPD78134GF-033-3B9	not used 8-759-061-49 IC UPD78134GF-043-3B9
44	F951 1-532-783-21 FUSE, MICRO 5A 125V F952 1-532-783-21 FUSE, MICRO 5A 125V	not used not used

Sony Corporation
Audio Group

English
91L1832-1
Printed in Japan
©1991. 12
Published by Customer Relations and Service Group

9-956-841-11

SS-H1600L

SERVICE MANUAL

US Model

- **SS-H1600L are the SPEAKER SYSTEM in MHC-300.**

- SS-H1600L is almost the same as the model SS-H1600 (US Model) previously product.
- This model contains only the points which differ from SS-H1600 (US Model).

SS-H1600
SERVICE MANUAL Page 3

Ref. No.	Part No.	Description
1	X-4942-267-1	PANEL ASSY, FRONT
SP1	1-544-445-11	SPEAKER (12CM)

SPEAKER SYSTEM

SONY®

English
91L0432-1
Printed in Japan
© 1991. 12

9-956-839-11

Sony Corporation
Audio Group

Published by Customer Relations and Service Group

SS-H1600

SERVICE MANUAL

US Model
Canadian Model
AEP Model
E Model

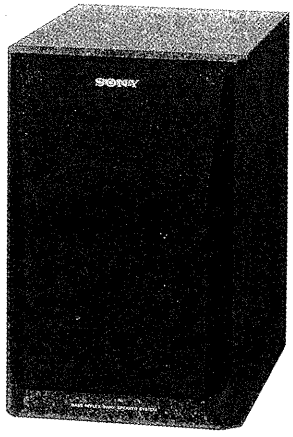

SPECIFICATIONS

Speaker system	(US model) 2-way (Canadian, AEP, E models) 3-way
Speaker units	(US model) Woofer: 13cm($5^1/_8$in.)cone type Tweeter: 5cm(2 in.)cone type (Canadian, AEP, E models) Woofer: 13cm($5^1/_8$in.)cone type Tweeter: 5cm(2 in.)cone type Super Tweeter: 2cm($^{13}/_{16}$in.) dome type
Power handling capacity	(US model) Maximum input power 50W (Canadian, AEP, E models) Maximum input power 60W
Sensitivity	88dB/W/m
Effective frequency range	65-20,000 Hz
Rated impedance	6 ohms
Dimensions	Approx. 165x250x230mm(w/h/d) ($6^1/_2$ x $9^7/_8$ x $9^1/_8$ in.)
Weight	Approx. 2.6 kg per speaker (5 lb 12 oz)

Design and specifications subject to change without notice.

1. FRONT PANEL REMOVAL

Note : Be careful not to scratch the cabinet.

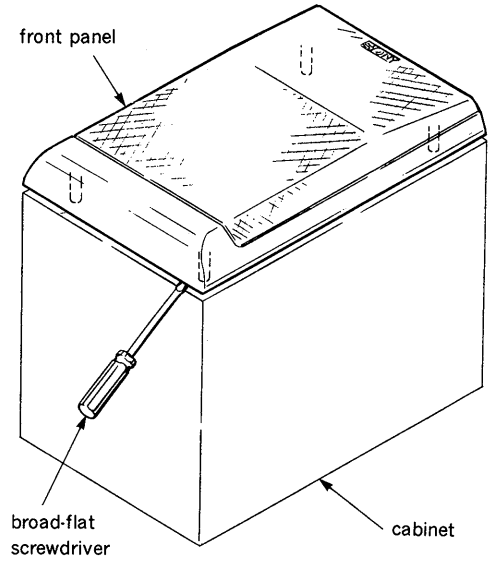

SPEAKER SYSTEM

SONY®

2. WIRING DIAGRAM

(US model)

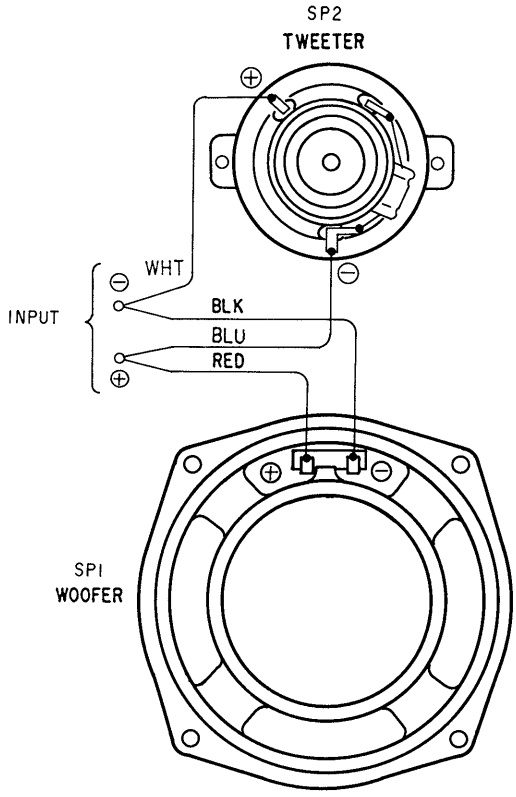

(Canadian, AEP, E models)

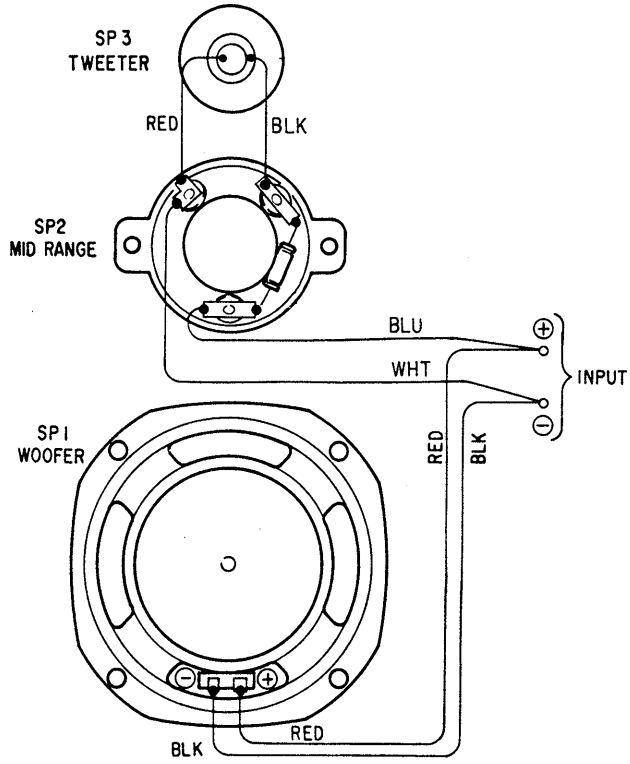

3. EXPLODED VIEW AND PARTS LIST

NOTE:

- The mechanical parts with no reference number in the exploded views are not supplied.
- Items marked "*" are not stocked since they are seldom required for routine service. Some delay should be anticipated when ordering these items.
- -XX, -X mean standardized parts, so they may have some differences from the original one.
- Color Indication of Appearance Parts
  Example:
  KNOB, BALANCE (WHITE)...(RED)
  ↑ Parts Color ↑ Cabinet's Color

(US model)

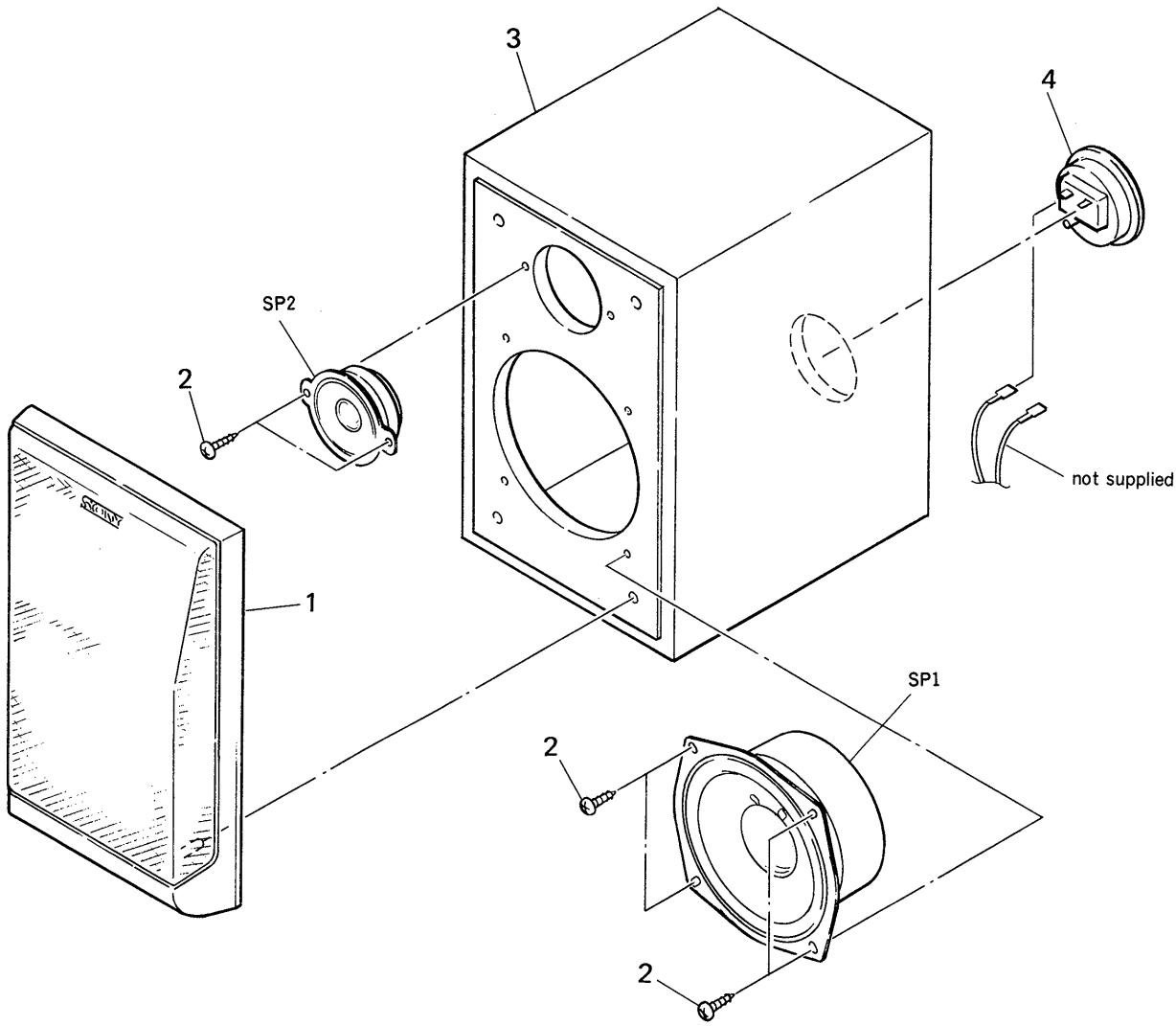

Ref.No	Part No.	Description	Remarks
1	X-4941-290-1	PANEL ASSY, FRONT	
2	4-874-614-11	SCREW (4) (3.5×14), TAPPING	
3	X-4941-289-1	CABINET ASSY, SPEAKER	
4	1-537-145-11	TERMINAL BOARD (SPEAKER)	
SP1	1-544-428-11	SPEAKER (12CM)	
SP2	1-544-262-11	SPEAKER (5CM)	
		ACCESSORY & PACKING MATERIALS **********	
	4-920-151-01	SHEET, PROTECTION	
	*4-944-059-01	CUSHION	

3. EXPLODED VIEW AND PARTS LIST

NOTE:

- The mechanical parts with no reference number in the exploded views are not supplied.
- Items marked "*" are not stocked since they are seldom required for routine service. Some delay should be anticipated when ordering these items.
- -XX, -X mean standardized parts, so they may have some differences from the original one.
- Color Indication of Appearance Parts
  Example:
  KNOB, BALANCE (WHITE)...(RED)
  ↑ Parts Color ↑ Cabinet's Color

(Canadian, AEP, E models)

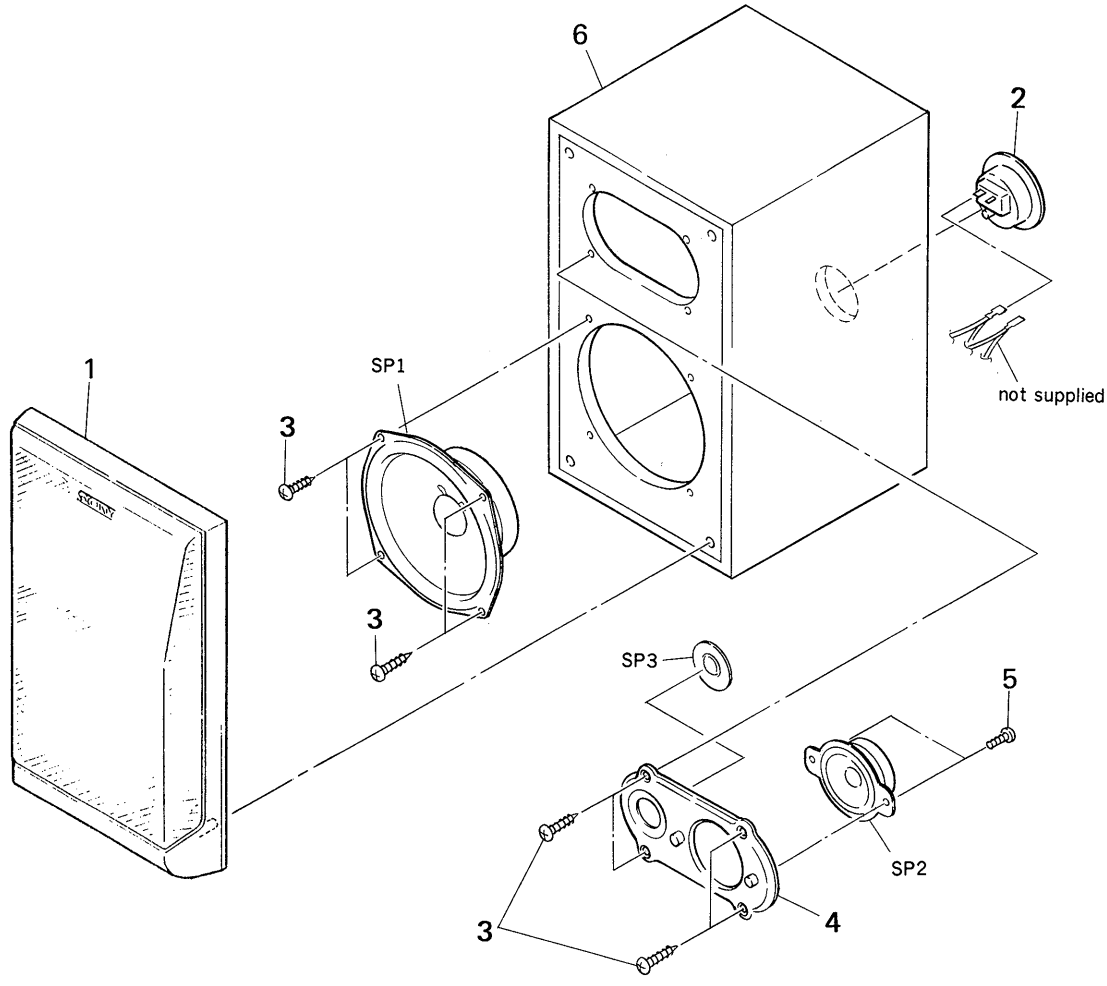

Ref.No	Part No.	Description	Remarks
1	X-4941-312-2	PANEL ASSY, FRONT	
2	1-537-145-11	TERMINAL BOARD (SPEAKER)	
3	4-874-614-11	SCREW +BVTP3.5×14	
4	*X-4941-441-1	FRAME ASSY, TW	
5	7-685-646-79	SCREW +BVTP3×8 TYPE2 SLIT	
6	X-4941-313-2	CABINET ASSY, SPEAKER (Canadian, AEP, E)	
6	X-4941-423-2	CABINET ASSY, SPEAKER (Germany)	
SP1	1-544-445-11	SPEAKER (12CM)	
SP2	1-544-446-11	SPEAKER (5CM)	
SP3	1-544-235-11	SPEAKER (2CM)	
		ACCESSORY & PACKING MATERIALS **********	
	1-575-495-11	CORD, SPEAKER (AEP, Germany)	
	3-753-187-11	MANUAL, INSTRUCTION (AEP, Germany)	
	4-920-151-01	SHEET, PROTECTION	
	*4-944-059-01	CUSHION	

9-956-340-11

Sony Corporation
Audio Group

English
91C0483-1
Printed in Japan
© 1991. 3

Published by Customer Relations and Service Group

HCD-H1600

SERVICE MANUAL

AEP Model
UK Model

This set is the tuner, deck, CDP and amplifier section in MHC-1600.

SPECIFICATIONS

Tuner Section

System — FM stereo, FM/AM superheterodyne tuner

FM tuner section

Tuning range — 87.5 — 108 MHz
Antenna terminals — 75 ohms unbalanced
Intermediate frequency — 10.7 MHz

AM tuner section

Tuning range — For Europe and U.K. (except Italy)
MW: 531 — 1,602 kHz
LW: 153 — 279 kHz
For Italy
MW: 522 — 1,611 kHz
LW: 144 — 288 kHz
Antenna — AM loop antenna
External antenna terminals
Intermediate frequency — 450 kHz

Amplifier Section

Continuous RMS power output
30 + 30 watts (6 ohms at 1 kHz, 5% THD)
25 + 25 watts (6 ohms, DIN, 1 kHz)
Music power output
(for the Europe and U.K. model)
45 watts
Peak music power output
(for the models other than Europe and U.K.)
280 watts (6 ohms)
Inputs — MIX MIC (minijack):
sensitivity 1 mV,
impedance 600 ohms
DAT IN:
sensitivity 450 mV,
impedance 47 kilohms
For Europe and U.K.
PHONO (phono jacks):
sensitivity 5 mV,
impedance 47 kilohms

Model Name Using Similar Mechanism	CDP-H3600
CD Mechanism Name	CDM13BD4A
Base Unit Name	BU-5BD4A

Outputs — HEADPHONES
(stereo minijack):
accepts headphones of 8 ohms or more.
SPEAKER:
accepts speakers of 6 to 16 ohms

Compact Disc Player Section

System — Compact disc digital audio system
Laser — Semiconductor laser
(λ = 780 nm)
Emission duration continuous
Laser output — Max. 44.6 μW*
* This output is the value measured at distance of about 200 mm from the objective lens surface on the Optical Pick-up Block.
Signal to noise ratio — More than 90 dB
Dynamic range — More than 90 dB
Harmonic distortion — Less than 0.05% (at 1 kHz)
Channel separation — More than 90 dB
Output level — 2 V (at 50 kilohms)
Load impedance — More than 10 kilohms

MINI HI-FI
COMPONENT SYSTEM

SONY®

MICROFILM

TABLE OF CONTENTS

Section	Title	Page
1.	GENERAL	3
2.	DISASSEMBLY	5
3.	ADJUSTMENTS	
	Electrical Adjustments	8
4.	DIAGRAMS	
	4-1. Blockdiagram	11
	4-2. Circuit Boards Location	13
	4-3. Semiconductor Lead Layouts	14
	4-4. Printed Wiring Boards — Audio Section — (Former Type)	15
	4-5. Printed Wiring Boards — Audio Section — (New Type)	20
	4-6. Schematic Diagram — Audio Section —	25
	4-7. Printed Wiring Boards — CD Section—	30
	4-8. Schematic Diagram — CD Section—	32
	4-9. Waveforms	35
5.	EXPLODED VIEWS	
	5-1. Front Panel Section	36
	5-2. Chassis Section	37
	5-3. CD Mechanism Section-1	38
	5-4. CD Mechanism Section-2	39
6.	ELECTRICAL PARTS LIST	40

G:Germany

IT:Italian

SAFETY-RELATED COMPONENT WARNING!!

COMPONENTS IDENTIFIED BY MARK ⚠ OR DOTTED LINE WITH MARK ⚠ ON THE SCHEMATIC DIAGRAMS AND IN THE PARTS LIST ARE CRITICAL TO SAFE OPERATION. REPLACE THESE COMPONENTS WITH SONY PARTS WHOSE PART NUMBERS APPEAR AS SHOWN IN THIS MANUAL OR IN SUPPLEMENTS PUBLISHED BY SONY.

SECTION 1
GENERAL

This section is extracted from instruction manual.

Parts Identification

Refer to the pages indicated in ● for use of the buttons.

Tuner/Amplifier/CD player Section A

1. Display window
2. MEMORY/NEXT button ⑳
3. TIMER SET button ⑯
4. TUNING PRESET/TIMER +/– buttons ⑳
5. PRESET/TUNING button and PRESET indicator ㉜
6. BAND button ㊽
7. Remote control sensor
8. SYSTEM POWER button ㉔
9. MIC (microphone) LEVEL control ⑪⑧
10. MIX MIC (mixing microphone) input jack (minijack) ⑪⑧
11. CLOCK SET button ⑳
12. TIMER SELECT button ⑪⑧
13. HEADPHONES jack (stereo minijack) ㉒
14. PLAY MODE buttons
    - CONTINUE button ㉜
    - SHUFFLE button ㉜
    - PROGRAM button ㊳
15. CHECK button ㊵
16. EDIT/TIME FADE button ㊷
17. PRESET button and indicators ㊷
18. EQ (equalizer) ON/OFF button ㊷
19. FUNCTION button ⑱
20. VOLUME control ㉒
21. WAKE UP button ⑪④
22. S-SUR (Simulated surround) button and indicator ㉒
23. DBFB (Dynamic Bass Feedback) button and indicator ㉒
24. CD operation buttons
    - ⏏ : OPEN/CLOSE ㉔
    - ■ : Stop ㉔
    - ▷II : Play/pause ㉔
    - ⏮ ◀◀ ▶▶ ⏭ : Manual search (when kept depressed)/Automatic Music Sensor (when pressed) ㉖
25. Disc tray ㉔

A

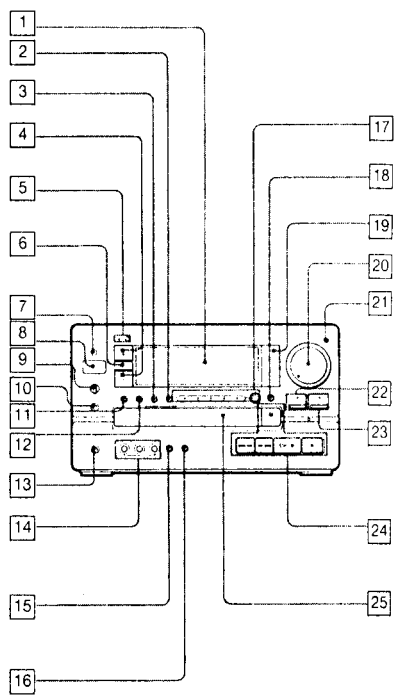

Parts Identification

Cassette Deck Section B

1. CD SYNCHRO (CD synchronized recording) button and indicator 38
2. NORMAL SPEED (normal-speed dubbing) button and indicator 76
3. HIGH SPEED (high-speed dubbing) button and indicator 76
4. Cassette holder (Deck A) 54
5. ⏏ (eject) button (Deck A) 54
6. RESET button 56
7. DOLBY NR (Dolby Noise Reduction) button 56
8. DIRECTION MODE button 54
9. Cassette holder (Deck B) 70
10. Tape operation buttons (for Deck B only)
    - ❚❚ : PAUSE 54
    - ● : REC (recording) 70
11. Tape operation buttons (for Deck A and B)
    - ◀◀ ▶▶ : Fast winding 56
    - ■ : Stop 54
    - ▷ : Forward play 54
    - ◁ : Reverse play 54
12. ⏏ (eject) button (Deck B) 70
13. DECK A/B selection button 54
14. Display window

B

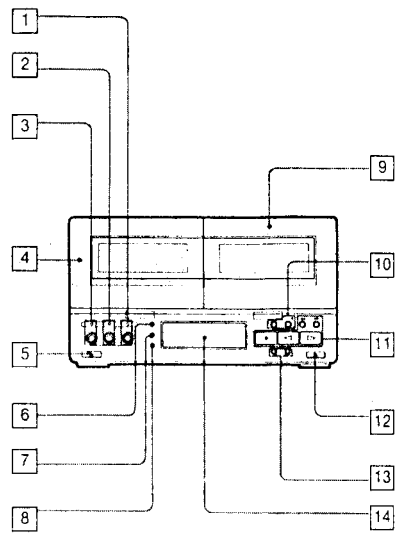

Remote Commander C

1. TIMER SELECT button 110
2. CLOCK DISPLAY button 20
3. Cassette deck select button
4. DECK A/B selector 54
5. CD player select button
6. CD player operation buttons 24
7. TUNER/EQ/CD selector 34
8. CHECK (CD player) 40
   BAND (tuner) button 48
9. Tuner select button
10. PHONO select button 18
11. DAT select button 18
12. VIDEO select button 18
13. S-SUR button 22
14. DBFB button 22
15. SLEEP timer button 116
16. SYSTEM POWER button 24
17. Tape operation buttons 34 72
18. TIME button 28
19. PLAY MODE buttons 30
20. CLEAR button 36
21. TUNER/EQ/CD numeric buttons 34
22. MEMORY button 66
23. VOLUME +/– control buttons 22
24. EQ ON/OFF button 62
25. CURSOR CONTROL buttons 64

C

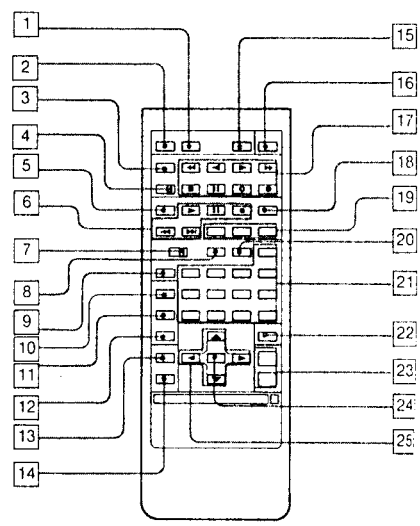

SECTION 2
DISASSEMBLY

Note: Follow the disassembly procedure in the numerical order given.

CASE

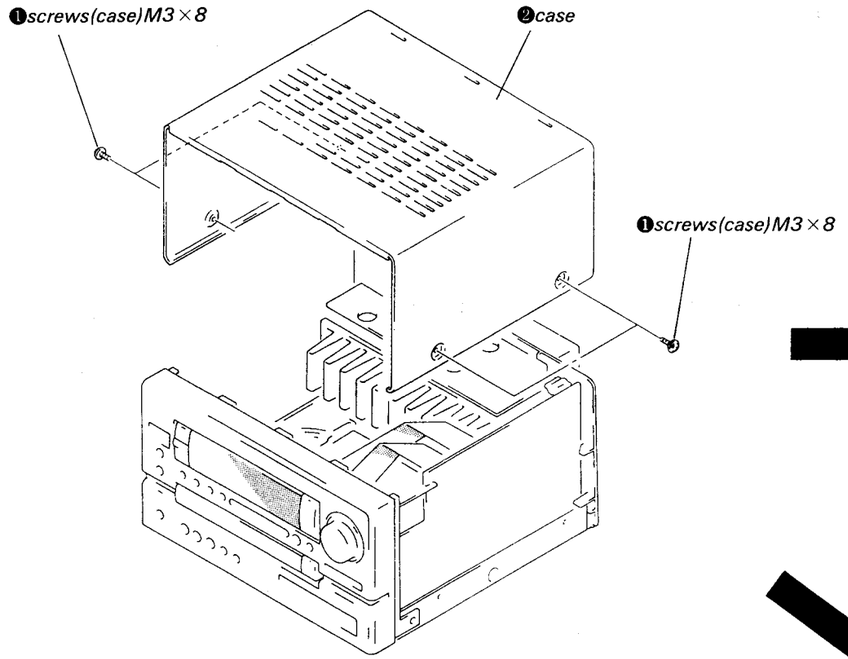

BACK PANEL

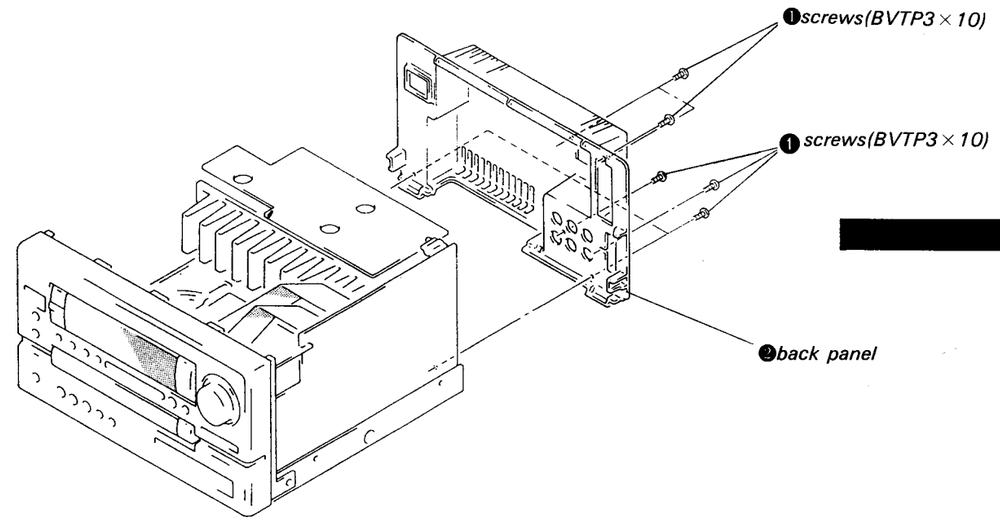

FRONT PANEL

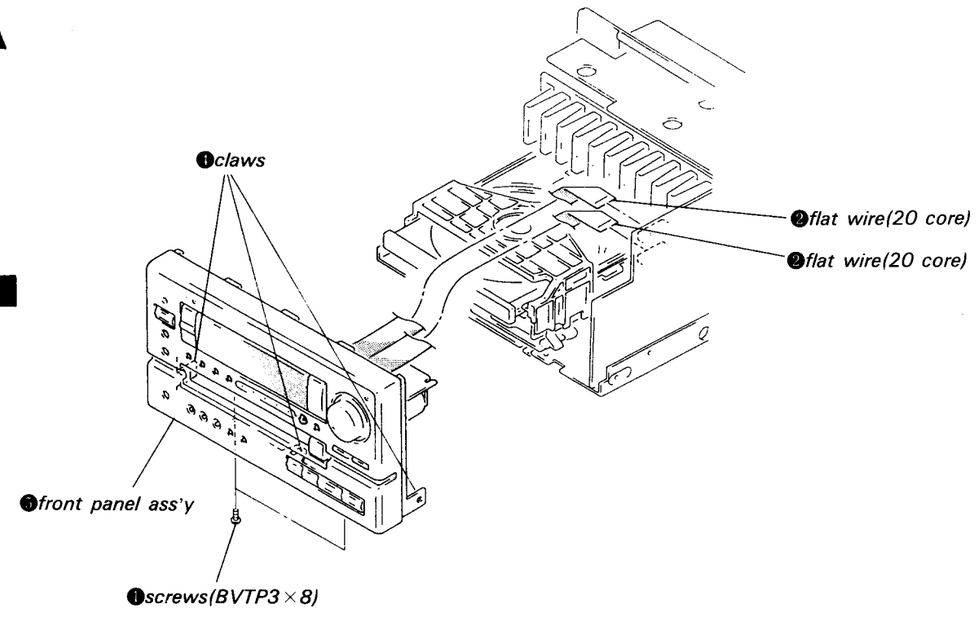

PANEL BOARD

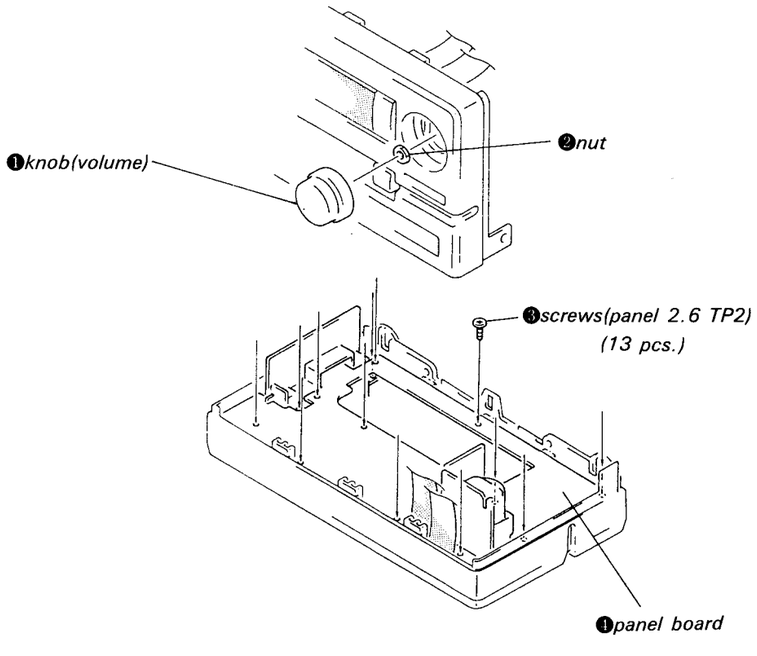

ase)M3×8

BACK PANEL

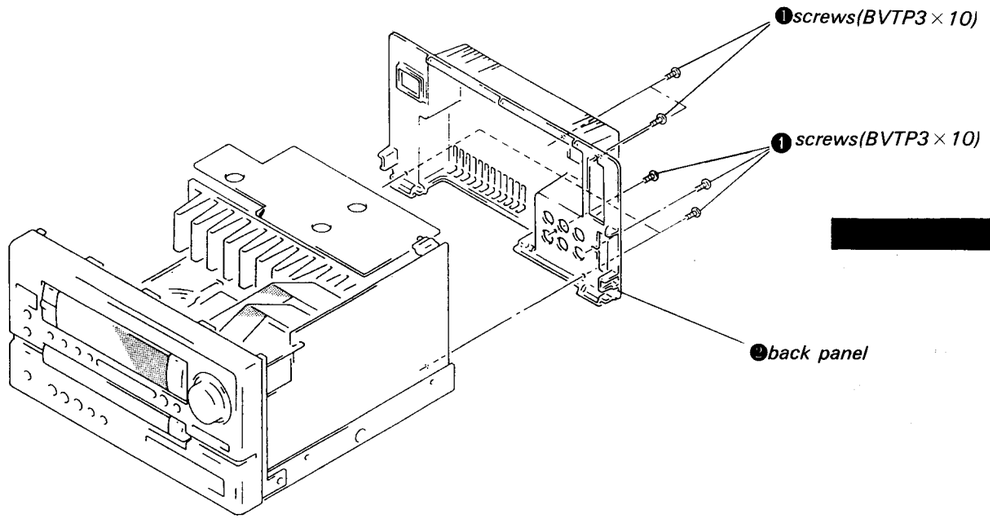

POWER BLOCK

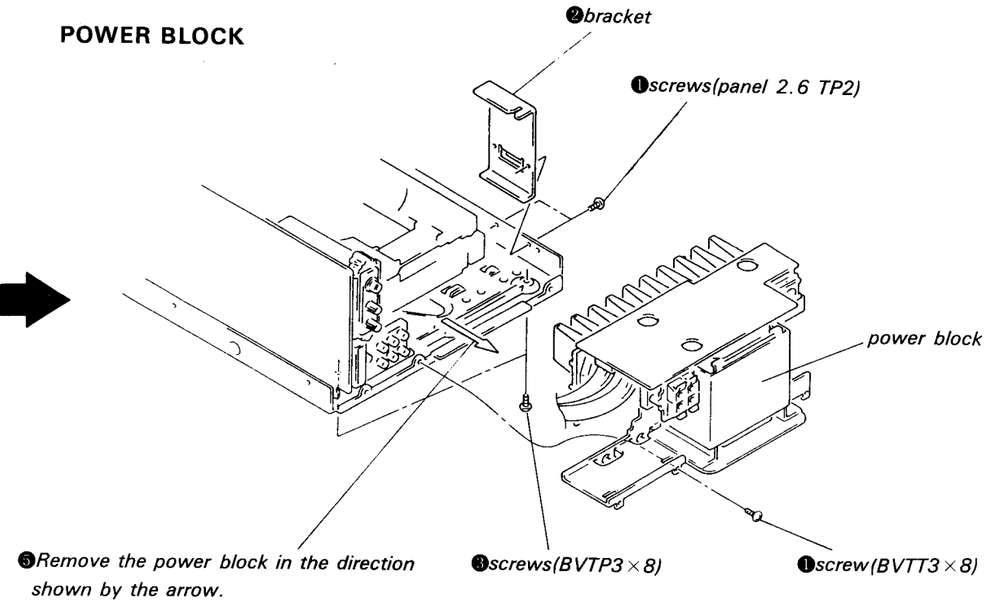

FRONT PANEL

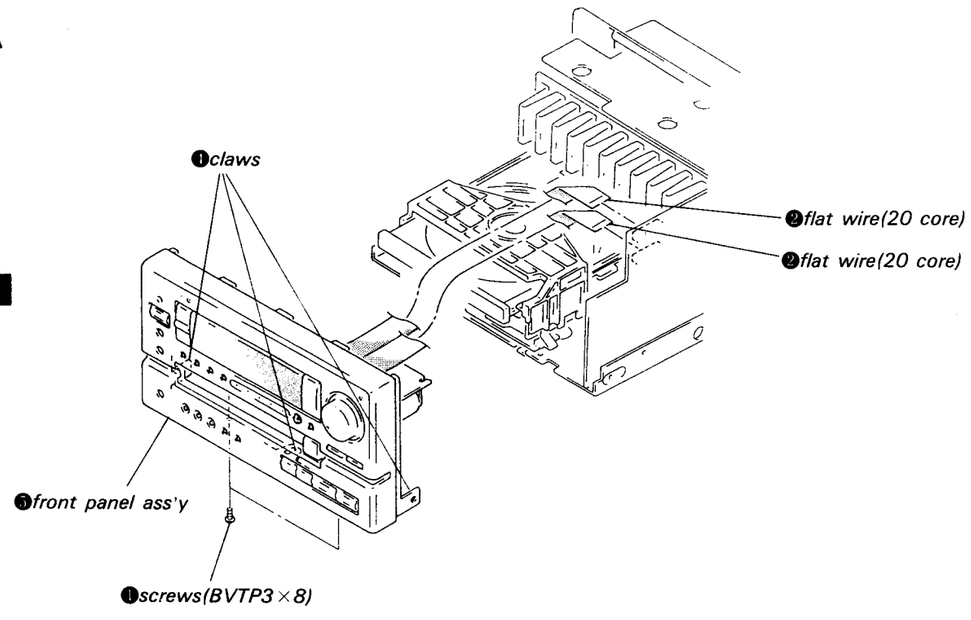

CD BLOCK

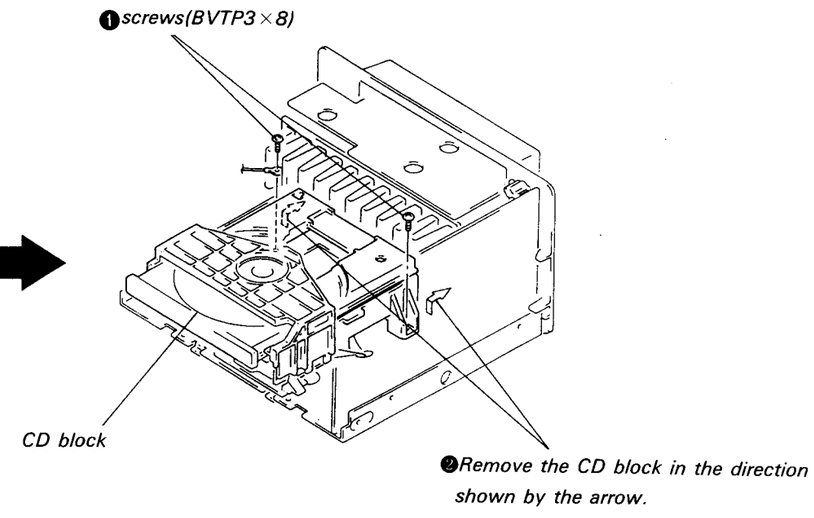

SECTION 3
ADJUSTMENTS
ELECTRICAL ADJUSTMENTS

CD SECTION

Note :

1. CD Block basically constructed to operate without adjustment. Therefore, check each item in order given.
2. Use YEDS-18 disc (3-702-101-01) unless otherwise indicated.
3. Use the oscilloscope with more than 10MΩ impedance.
4. Clean an object lens by an applicator with neutral detergent when the signal level is low than specified value with the following checks.

S Curve Check

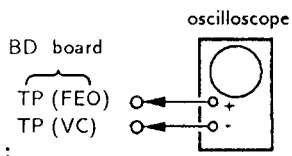

Procedure :

1. Connect oscilloscope to test point TP (FEO) on BD board.
2. Connect between test point TP (FES) and TP (VC) by lead wire.
3. Turned Power switch on and actuate the focus serch. (actuate the focus serch when disc table is moving in and out.)
4. Check the oscilloscope waveform (S curve) is symmetrical between A and B. And confirm peak to peak level within 3±1Vp-p.

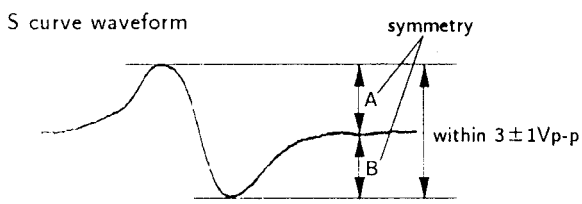

5. After check, remove the lead wire connected in step 2.

Note : • Try to mesure several times to make sure that the ratio of A : B or B : A is more than 10 : 7.
• Take sweep time as long as possible and light up the brightness to obtain best waveform.

RF Level Check

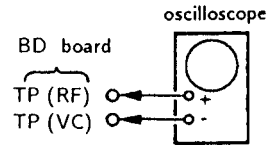

Procedure :

1. Connect oscilloscope to test point TP (RF) on BD board.
2. Turn Power switch on.
3. Put disc (YEDS-18) in and playback.
4. Confirm that oscilloscope waveform is clear and check RF signal level is correct or not.

Note :

Clear RF signal waveform means that the shape "◇" can be clearly distinguished at the center of the waveform.

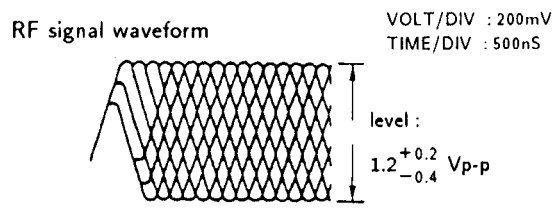

E-F Balance Check

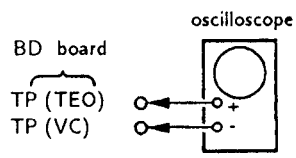

Procedure :

1. Connect test point TP (ADJ) to ground and TP (TES) to TP (VC) with lead wire.
2. Connect oscilloscope to test point TP (TEO) on BD board.
3. Turn Power switch on.
4. Put disc (YEDS-18) in and playback.
5. Confirm that the osilloscope waveform is symmetrical on the top and bottom in relation to 0V, and check this level.

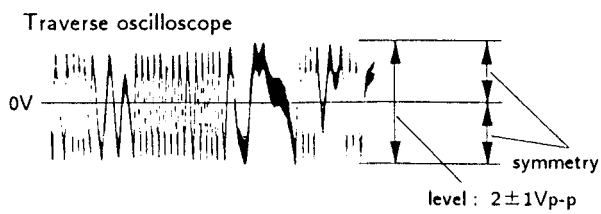

6. Remove the lead wire connected in step 1.

RF PLL Free-run Frequency Check

Procedure :

1. Connect frequency counter to test point (PCK) with lead wire.

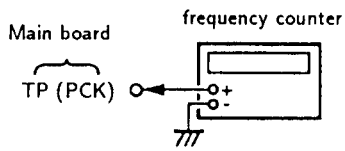

2. Turn Power switch on.
3. Confirm that reading on frequency counter is 4. 3218MHz.

Focus/Tracking Gain

This gain has a margin, so even if it is slightly off. There is no problem.
Therefore, do not perform, this adjustment.
Please note that it should be fixed to mechanical center position when you moved and do not know original position.

TUNER SECTION

FM SECTION ADJUSTMENTS

Setting :

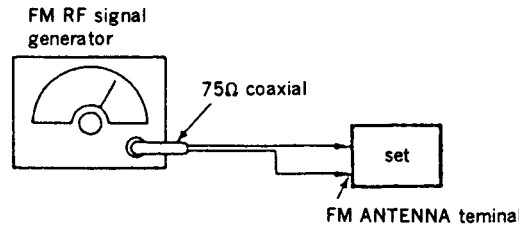

Carrier frequency : 98MHz
Modulation : 1kHz, 40kHz deviation (AEP, UK, G, IT)

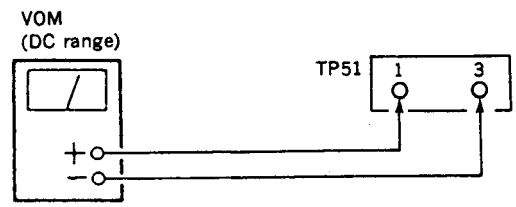

FM Discriminator Alignment (NULL Check)

Band : FM

Procedure :

1. Supply a 1mV (60dBμ) 98MHz signal from the ANTENNA terminal.
2. Tune the to 98MHz.
3. Adjust IFT51 for 0V reading on the VOM

Note : FM tuned indication lighting level adjustment should be made after FM discriminator alignment.

FM Tuned Indication Lighting Level Adjustment

Band : FM

Procedure :

1. Supply a 22.5μV(27dBμ)(AEP,UK)or 12.5μV(22dBμ)(G,IT) 98 MHz signal from the ANTENNA terminal.
2. Tune the set to 98MHz.
3. Adjust RV52 so that the TUNED light up.

Adjustment Location: TCB011 board

AM SECTION ADJUSTMENTS

Setting :

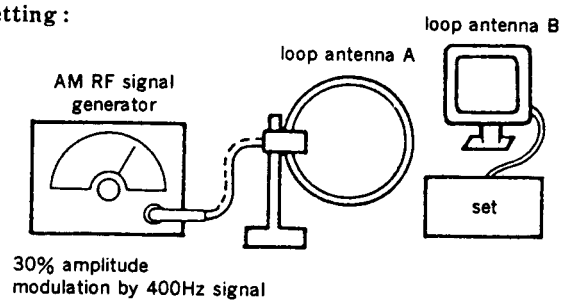

MW (AM) Tuned Indication Lighting Level Adjustment

Band : MW or AM

Procedure :

1. Set loop antenna A so that the loop antenna B input level becomes 0.25mV (48dBμ).
2. Tune the set to 1,404kHz .
3. Adjust the RV51 so that the [TUNED] light up.

Adjustment Location:

TCB011 BOARD(COMPONENT SIDE)

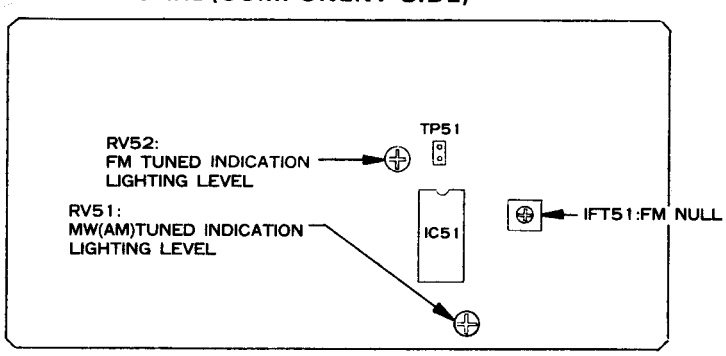

Adjustment Location:

BD BOARD(CONDUCTOR SIDE)

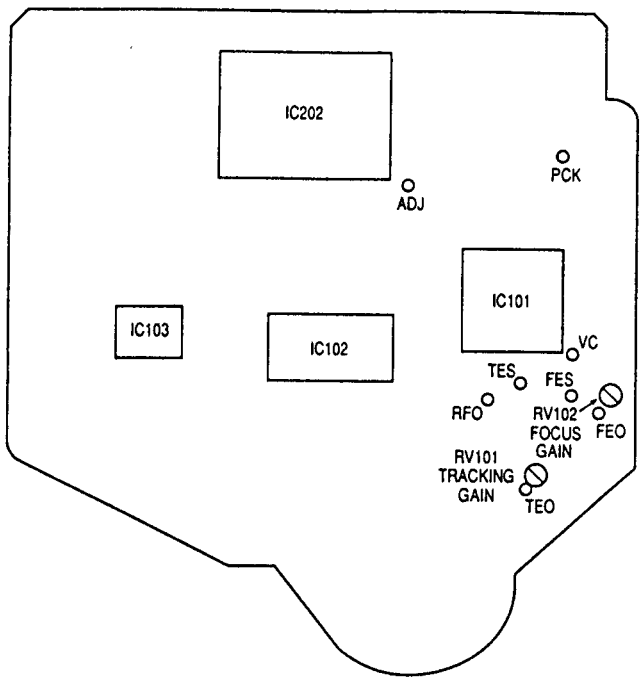

SECTION 4
DIAGRAMS

4-1. BLOCKDIAGRAM

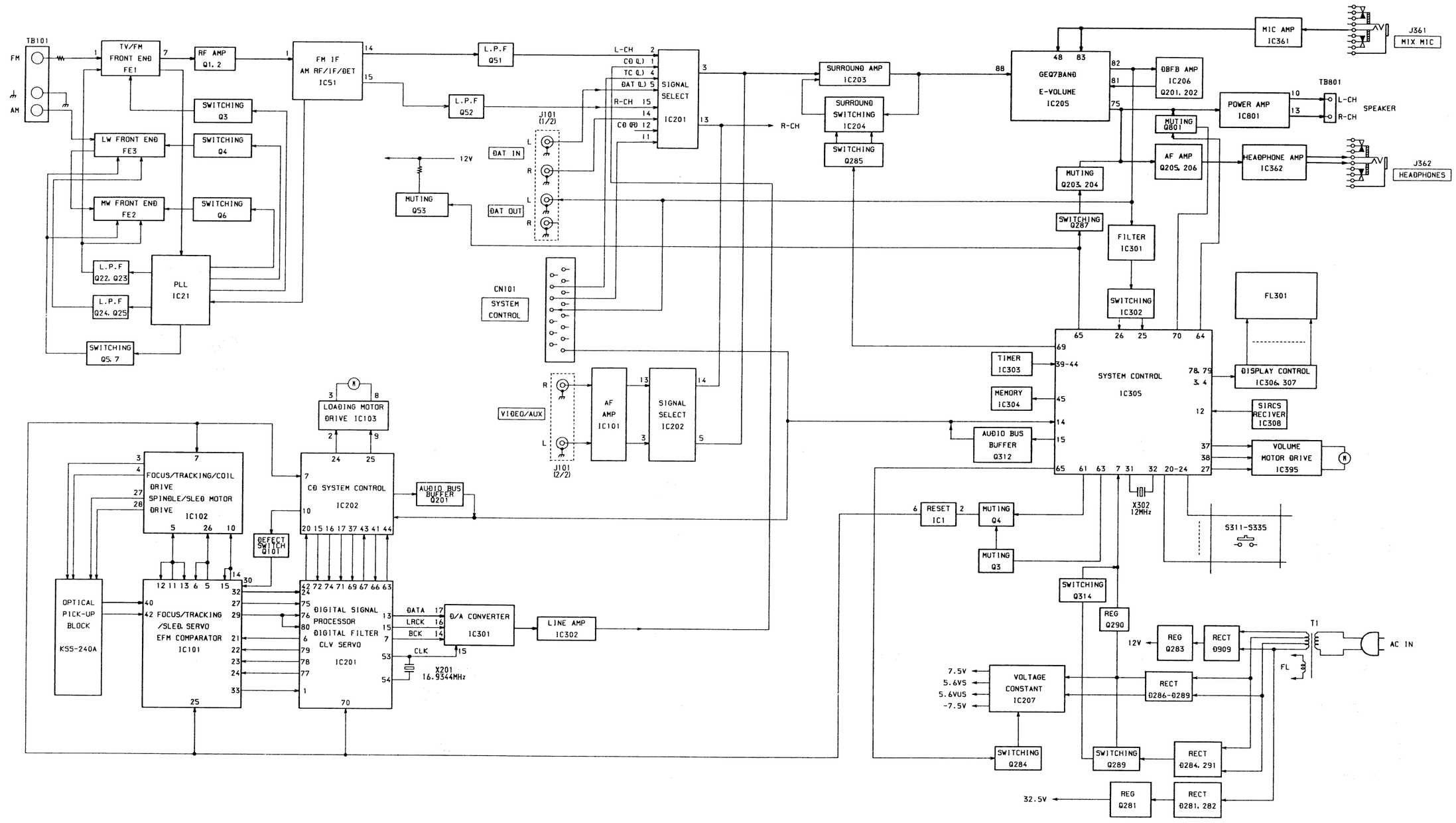

4-2. CIRCUIT BOARDS LOCATION

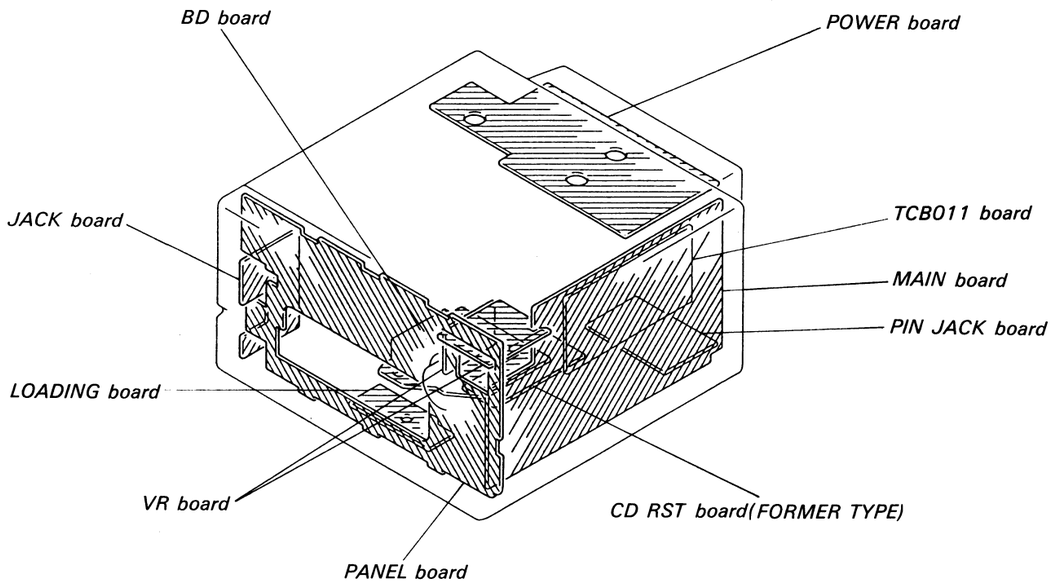

4-3. SEMICONDUCTOR LEAD LAYOUTS

CXA1372Q

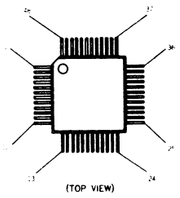

CXD2505Q
μPD78134GF-032-3B9

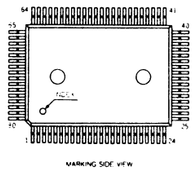

μPD75116GF-760-3BE

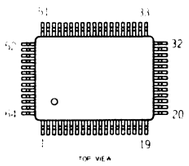

2SD2012

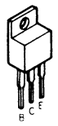

1SS355

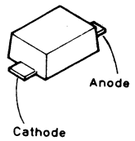

RBA-402

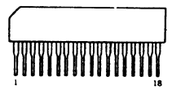

CXA1492Q

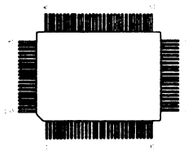

LA5603
STK4132MK2

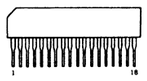

2SA1115-EF
2SC2603-EF

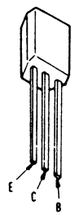

1SS120

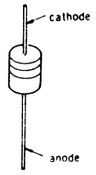

DTZ12B
DTZ3.9B
DTZ33B
DTZ4.7C
DTZ5.6B
DTZ6.2B

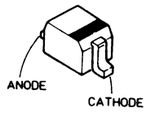

EC10DS2
EC10QS-04

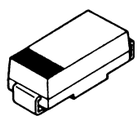

SEL2210S

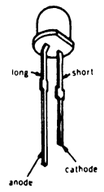

4-4. PRINTED WIRING BOARDS —— Audio Section(FORMER TYPE) ——

• Semiconductor Location(FORMER TYPE)

Ref. No.	Location	Ref. No.	Location
D1	H-29	IC207	F-7
D2	H-29	IC301	F-19
D3	K-29	IC302	F-20
D21	J-6	IC303	B-22
D51	K-3	IC304	C-21
D201	G-3	IC305	C-23
D202	D-7	IC306	B-27
D203	D-7	IC307	B-25
D205	C-10	IC308	B-29
D281	E-6	IC309	C-25
D282	E-5	IC361	G-14
D283	F-5	IC362	G-16
D284	E-8	IC395	B-16
D286	E-7	IC801	K-26
D287	E-7		
D288	E-7	Q1(TCB011)	I-5
D289	E-7	Q1(CD RST)	H-30
D290	F-6	Q2(TCB011)	I-4
D291	E-8	Q2(CD RST)	H-29
D292	E-9	Q3	I-5
D293	D-9	Q4	K-7
D294	D-9	Q5	J-8
D301	E-19	Q6	K-7
D302	F-19	Q7	K-9
D311	C-24	Q21	I-6
D312	D-19	Q22	J-7
D313	F-29	Q23	J-7
D314	C-22	Q24	J-8
D316	D-20	Q25	J-8
D317	D-18	Q51	J-3
D318	A-28	Q52	J-3
D319	D-25	Q53	I-4
D320	D-25	Q201	B-6
D321	D-24	Q202	C-6
D322	D-23	Q203	D-6
D323	D-23	Q204	D-6
D324	E-20	Q205	D-7
D325	E-20	Q206	D-6
D326	B-21	Q281	F-5
D327	C-22	Q283	F-6
D328	C-22	Q284	F-7
D329	E-20	Q286	B-10
D330	G-20	Q287	D-5
D331	D-19	Q289	E-8
D391	F-16	Q290	F-9
D801	J-27	Q311	C-26
D909	I-24	Q312	B-24
		Q313	D-20
IC1	J-30	Q314	B-22
IC2	I-29	Q801	J-28
IC21	J-6		
IC51	J-5		
IC101	J-16		
IC201	D-10		
IC202	E-10		
IC203	C-8		
IC204	C-9		
IC205	E-3		
IC206	C-7		

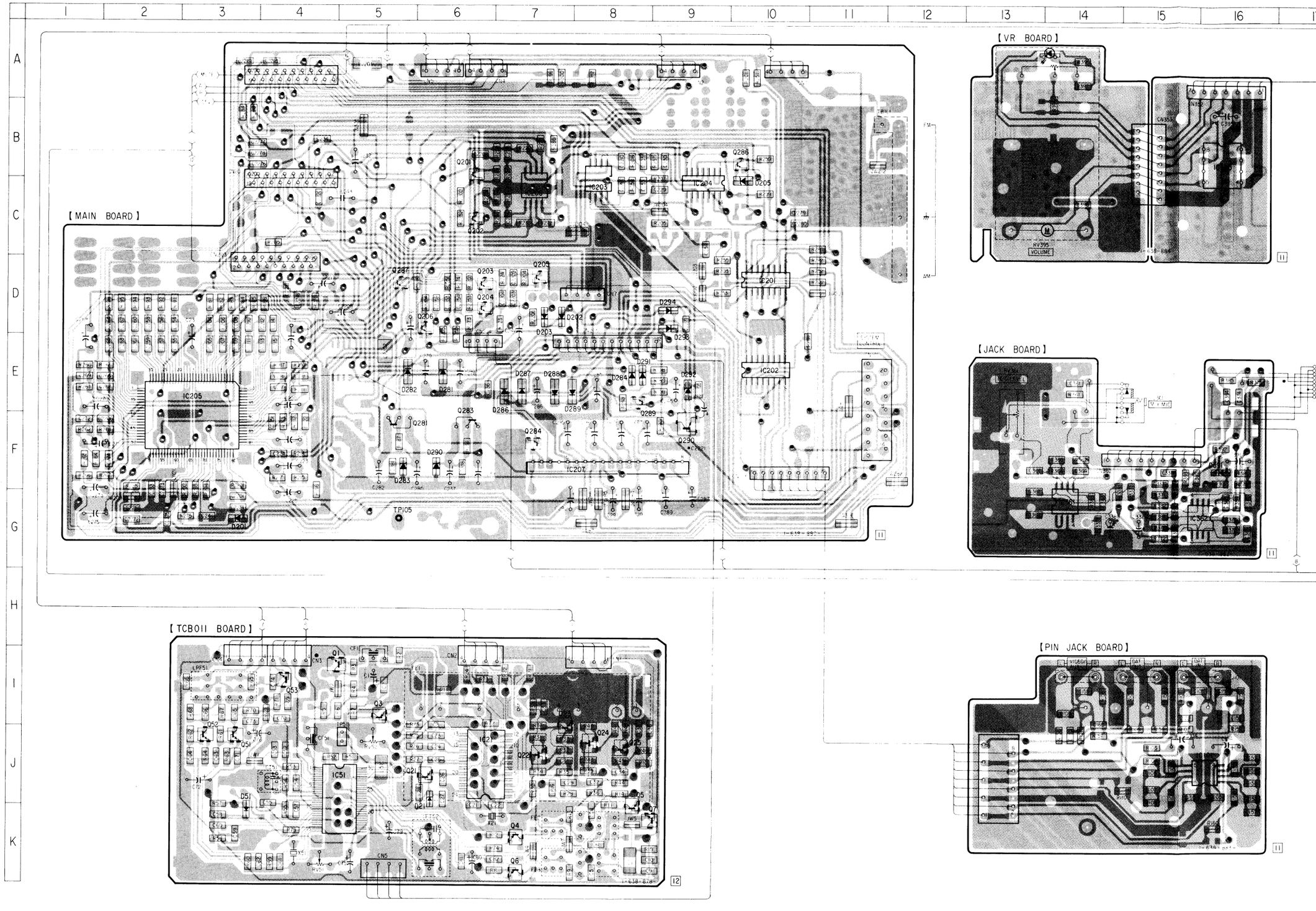

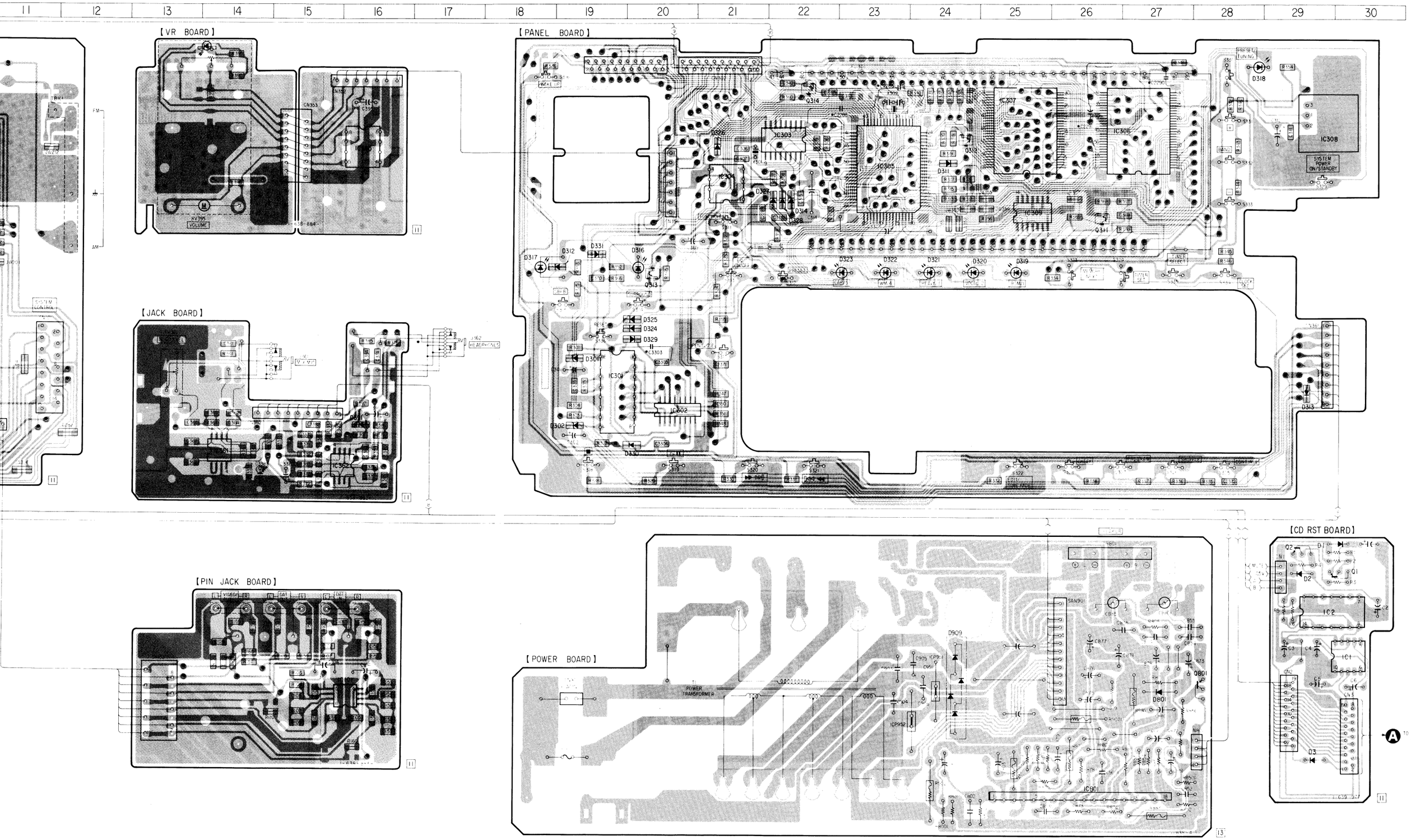

11
12
13
14
15
16
17
18
19
20
21
22
23
24
25
26
27
28
29
30
【VR BOARD】
【PANEL BOARD】
【JACK BOARD】
【PIN JACK BOARD】
【POWER BOARD】
【CD RST BOARD】
POWER TRANSFORMER
SYSTEM POWER ON/STANDBY
TO BD BOARD CN103

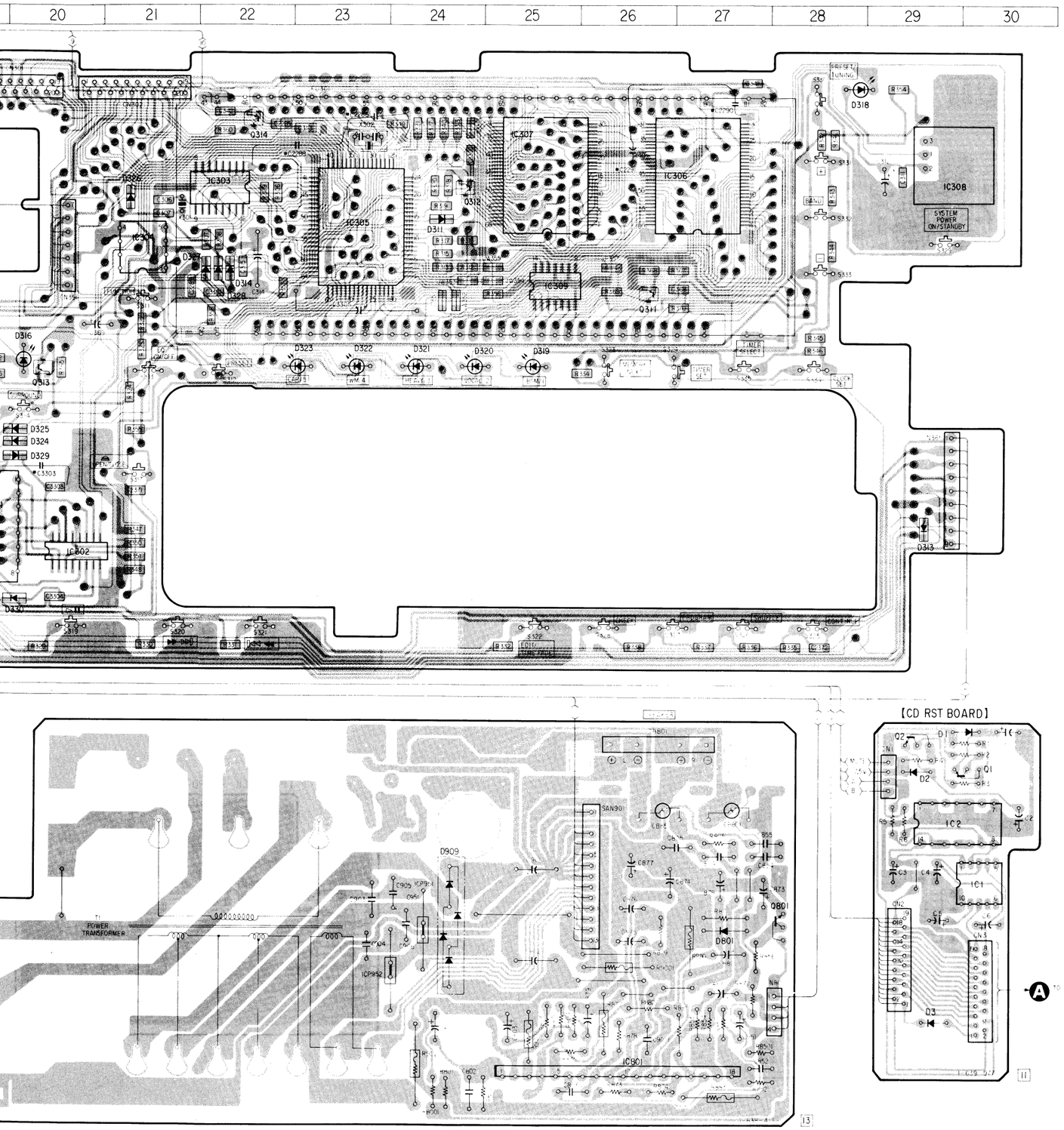

Note:

- ○—— : parts extracted from the component side.
- —— : parts extracted from the conductor side.
- ● : Through hole.
- : Pattern on the side which is seen.
- : Pattern of the rear side.

FORMER TYPE : AEP, UK

4-5. PRINTED WIRING BOARDS —— Audio Section (NEW TYPE)

• **Semiconductor Location(NEW TYPE)**

Ref. No.	Location	Ref. No.	Location
D1	D-11	IC301	F-19
D2	E-11	IC302	F-20
D3	C-3	IC303	B-22
D21	J-6	IC304	C-21
D51	K-3	IC305	C-23
D201	G-3	IC306	B-27
D202	D-7	IC307	B-25
D203	D-7	IC308	B-29
D205	C-10	IC309	C-25
D281	E-6	IC361	G-14
D282	E-5	IC362	G-16
D283	F-5	IC395	B-16
D284	E-8	IC801	K-26
D286	E-6		
D287	E-7	Q1 (TCB011)	I-5
D288	E-7	Q1 (MAIN)	E-11
D289	E-7	Q2 (TCB011)	I-4
D290	F-6	Q2 (MAIN)	E-11
D291	E-8	Q3 (TCB011)	I-5
D292	F-9	Q3 (MAIN)	B-4
D293	D-9	Q4 (TCB011)	K-7
D294	D-9	Q4 (MAIN)	B-5
D301	E-19	Q5	J-8
D302	F-19	Q6	K-7
D311	C-24	Q7	K-9
D312	D-19	Q21	J-6
D313	F-29	Q22	J-7
D314	C-22	Q23	J-7
D316	D-20	Q24	J-8
D317	D-18	Q25	J-8
D318	A-28	Q51	J-3
D319	D-25	Q52	J-3
D320	D-25	Q53	I-4
D321	D-24	Q201	B-6
D322	D-23	Q202	C-6
D323	D-23	Q203	D-6
D324	E-20	Q204	D-6
D325	E-20	Q205	D-7
D326	B-21	Q206	D-6
D327	C-21	Q281	F-5
D328	C-22	Q283	E-6
D329	E-20	Q284	F-7
D330	G-20	Q286	B-10
D331	D-19	Q287	D-5
D391	F-16	Q289	E-8
D801	J-27	Q290	F-9
D909	I-24	Q311	C-26
		Q312	B-24
IC1	D-2	Q313	D-20
IC21	J-6	Q314	B-22
IC51	J-5	Q801	J-28
IC101	J-16		
IC201	D-10		
IC202	E-10		
IC203	C-8		
IC204	C-9		
IC205	E-3		
IC206	C-7		
IC207	F-7		

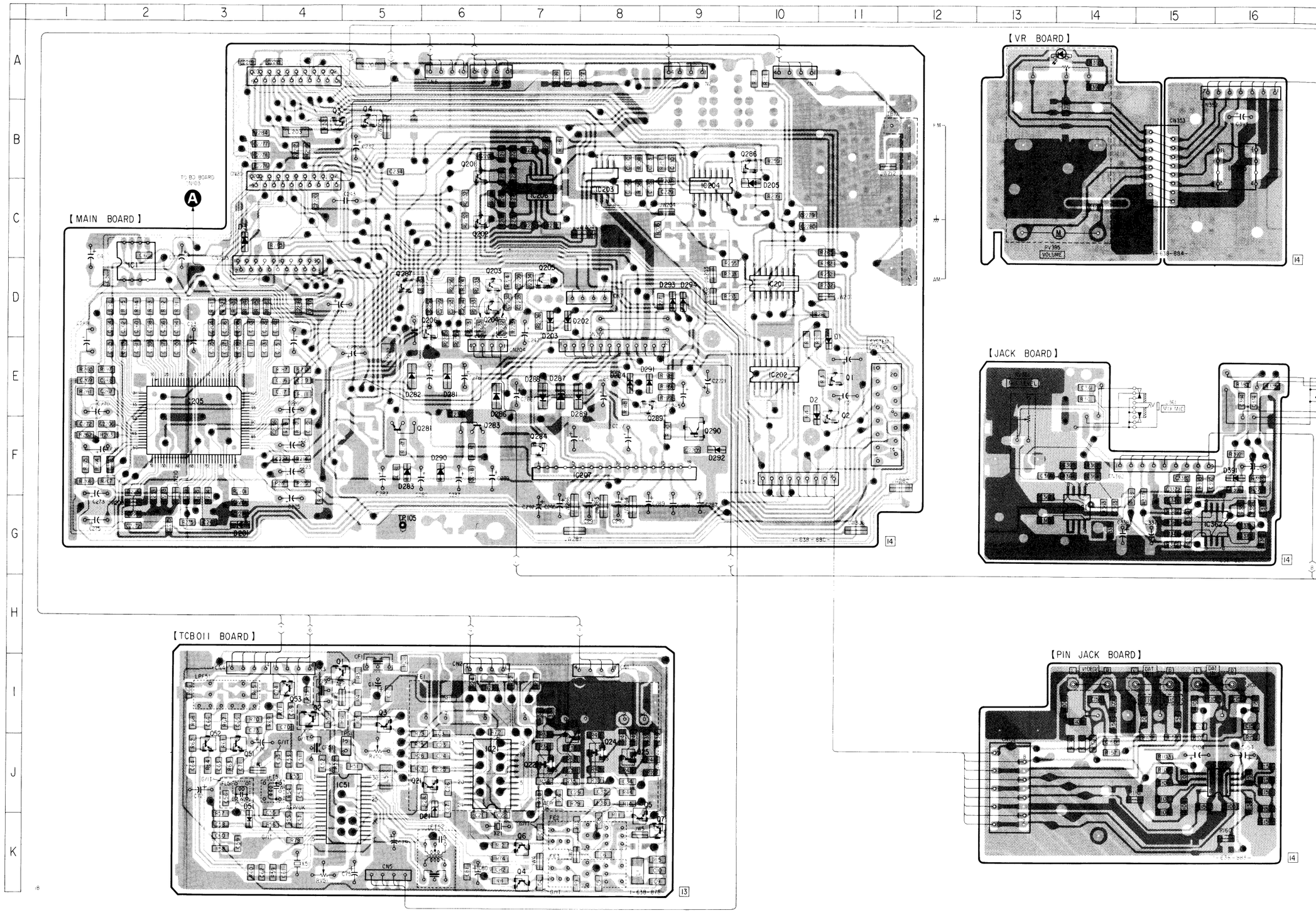

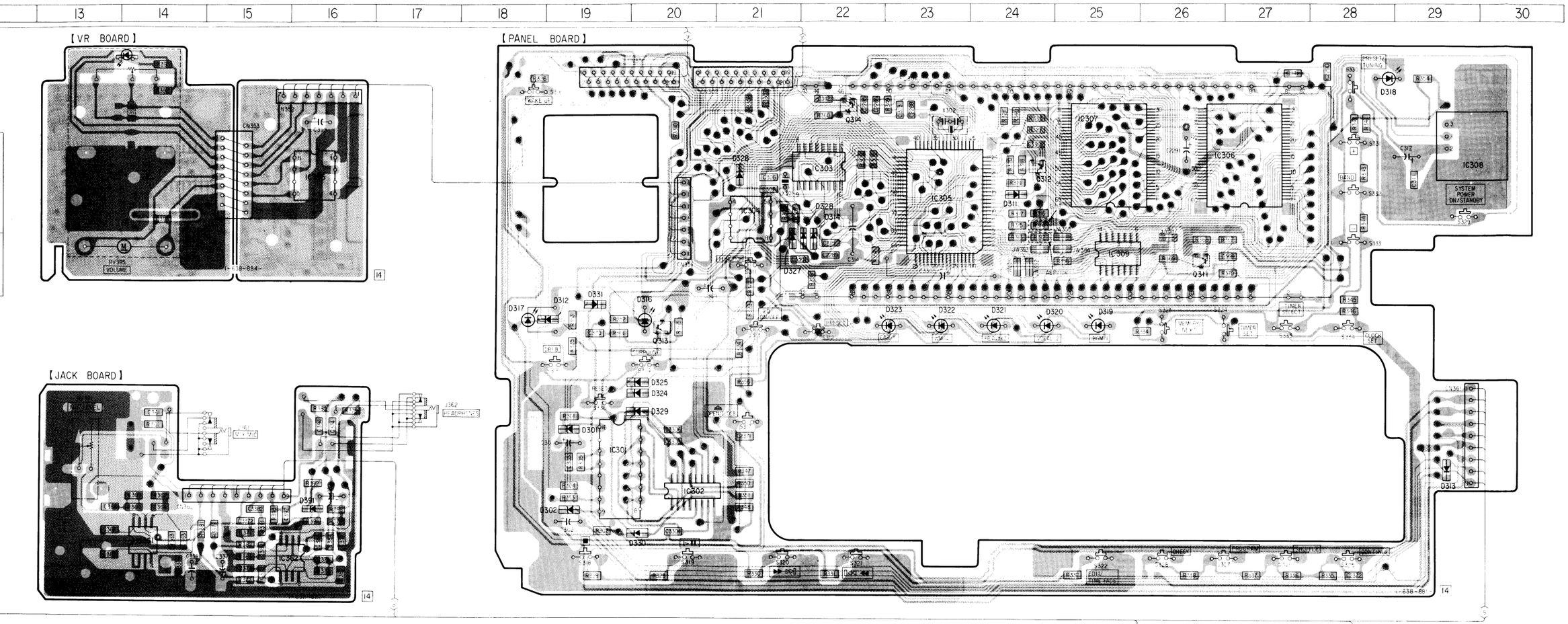

【PIN JACK BOARD】

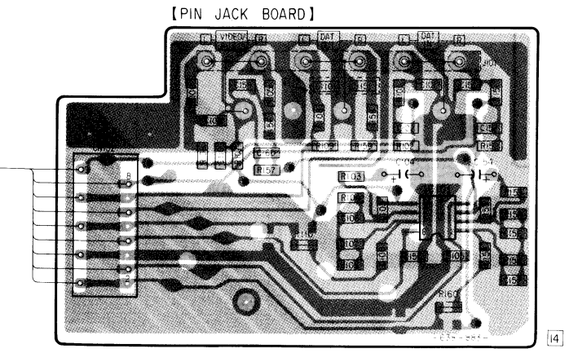

【POWER BOARD】

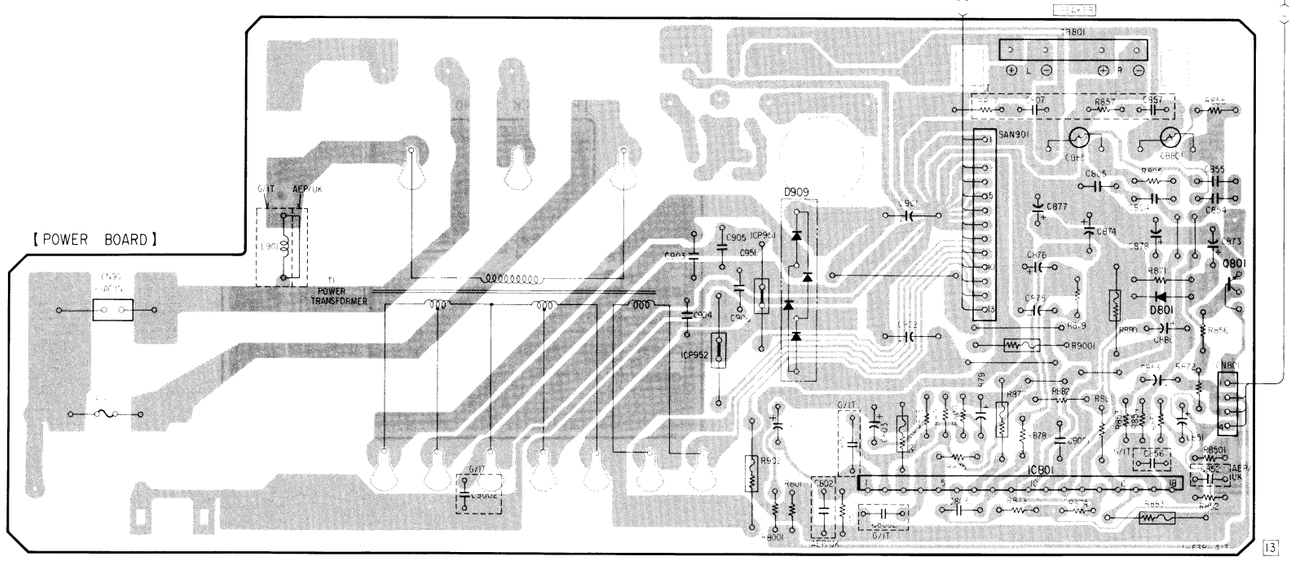

Note:

- All capacitors are in μF unless otherwise noted. pF: μμF 50WV or less are not indicated except for electrolytics and tantalums.
- All resistors are in Ω and 1/4 W or less unless otherwise specified.
- % : indicates tolerance.
- △ : internal component.
- : fusible resistor.

Note: The components identified by mark ⚠ or dotted line with mark ⚠ are critical for safety. Replace only with part number specified.

- ▬▬ : B+ Line
- ▬ ▬ : B− Line
- ▭ : adjustment for repair.

4-6. SCHEMATIC DIAGRAM —— Audio Section ——

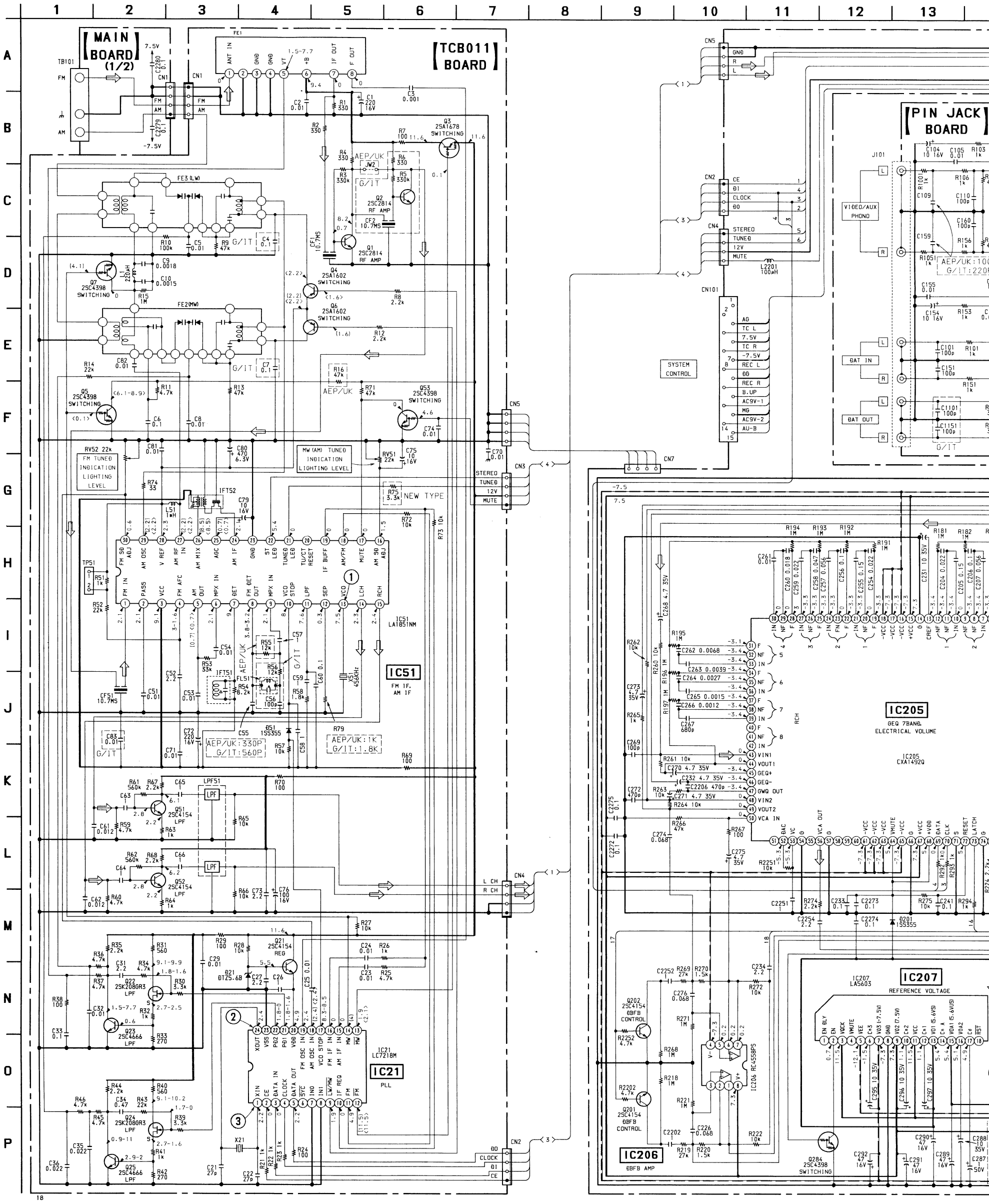

oted. pF: μμF
r electrolytics

less otherwise

⚠ or dotted
y.
ed.

- Voltage and waveforms are dc with respect to ground under no-signal (detuned) conditions.
  no mark : FM
  ( ) : MW
  < > : LW
- Voltages are taken with a VOM (Input Impedance 10MΩ). Voltage variations may be noted due to normal production tolerances.
- Waveforms are taken with a oscilloscope. Voltage variations may be noted due to normal production tolerances.
- Circled numbers refer to waveforms.
- Signal path.
  ⇨ : FM ⇨ : CD

NEW TYPE : AEP, G, IT, UK
FORMER TYPE : AEP, UK
G : Germany
IT : Italian

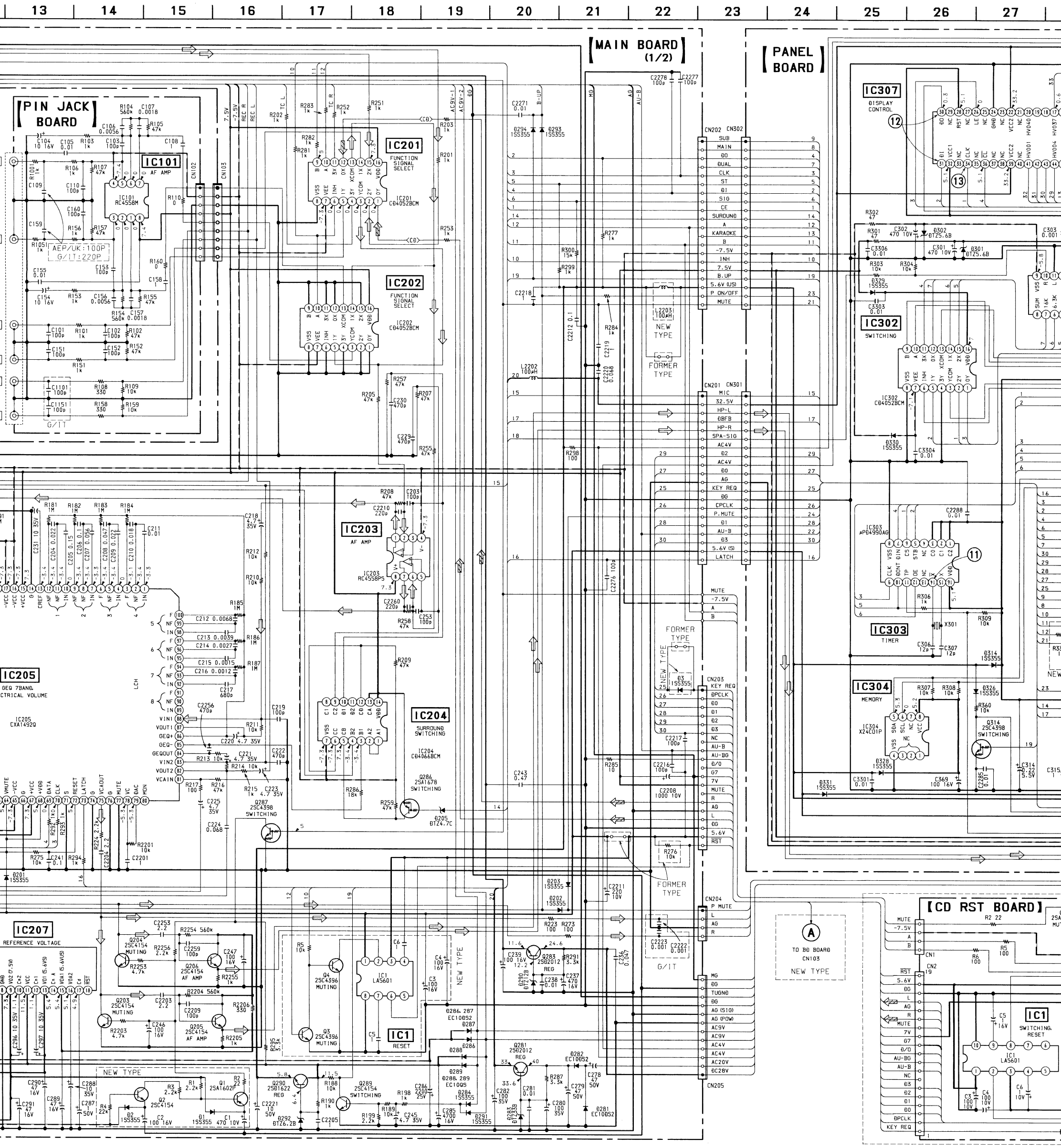

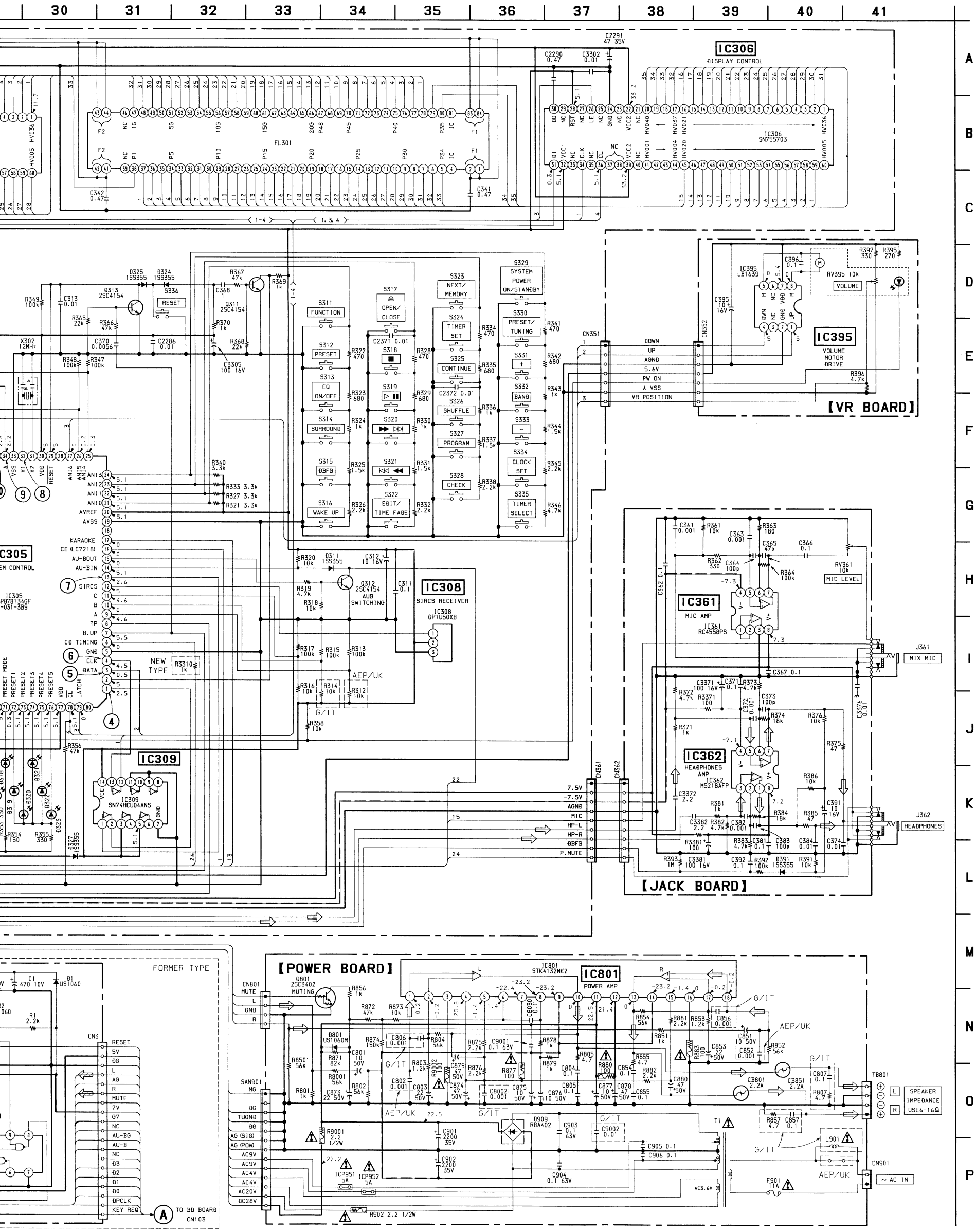
IC306
DISPLAY CONTROL
IC306
SN755703
FL301
IC305
PD78134GF
-031-3B9
IC308
SIRCS RECEIVER
IC308
GP1U50XB
IC309
SN74HCU04ANS
IC395
LB1639
VOLUME
MOTOR
DRIVE
【VR BOARD】
IC361
MIC AMP
IC361
RC4558PS
IC362
HEADPHONES
AMP
IC362
M5218AFP
【JACK BOARD】
J361
MIX MIC
J362
HEADPHONES
【POWER BOARD】
IC801
STK4132MK2
POWER AMP
SPEAKER
IMPEDANCE
USE6-16Ω
~ AC IN
FORMER TYPE
TO BD BOARD
CN103
NEW
TYPE
AEP/UK
G/IT

• **IC Block Diagrams**

IC1 LA5601

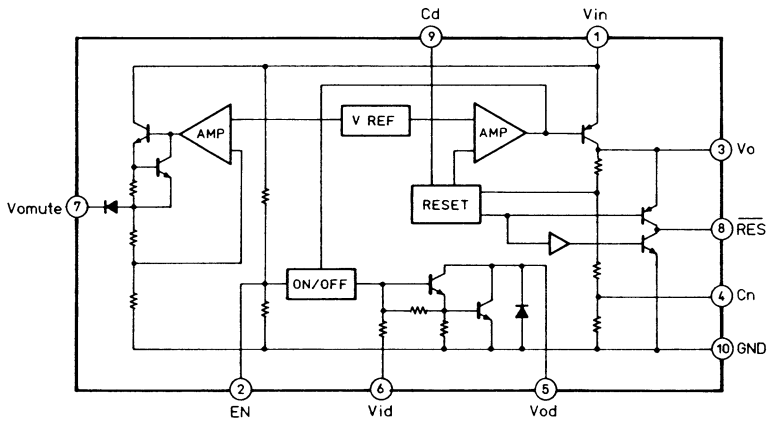

IC301 XR1091DCP

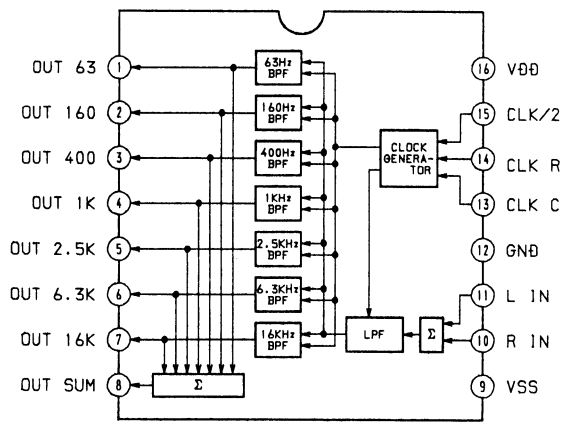

IC302 CD4025BCM

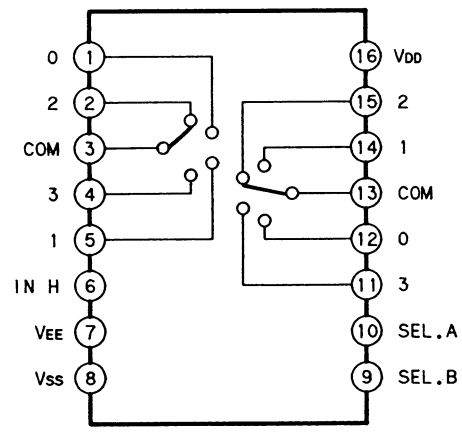

IC

IC205 CXA1492Q

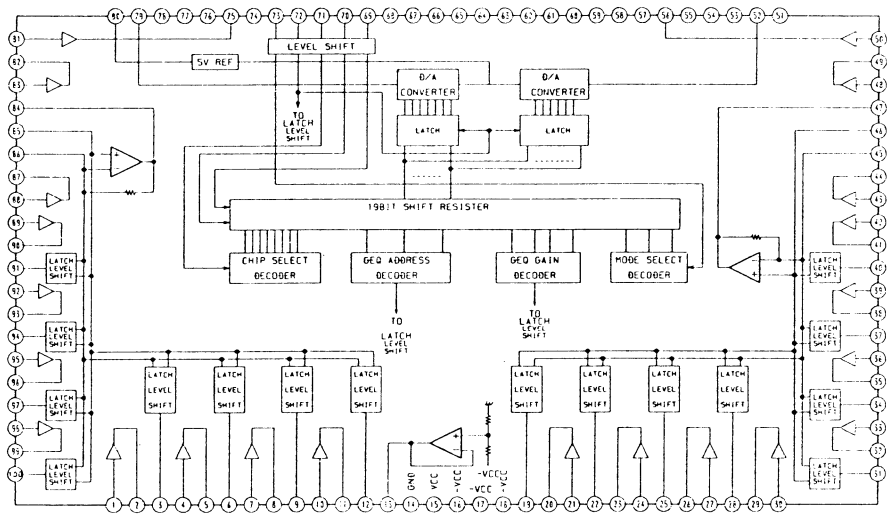

IC21 LC7218M

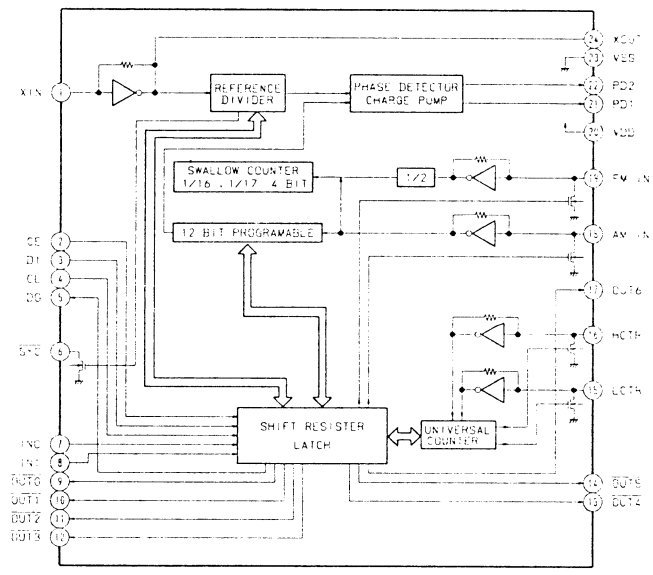

IC303 μPD4990AG

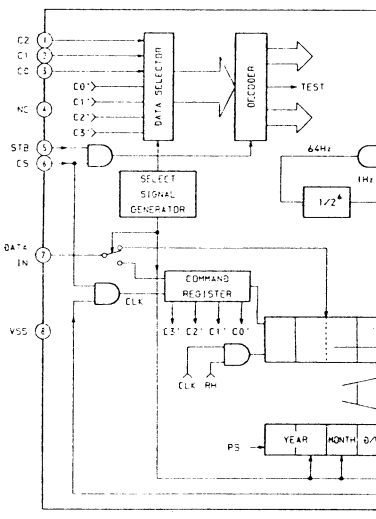

4-7. PRINTED WIRING BOARDS —— CD Section ——

Ref. No.	Location
D101	J-7
D201	H-5
IC101	C-10
IC102	C-8
IC103	C-7
IC201	C-3
IC202	B-8
IC301	C-5
IC302	A-4
Q101	B-10
Q201	B-5

【BD BOARD】(COMPONENT SIDE)

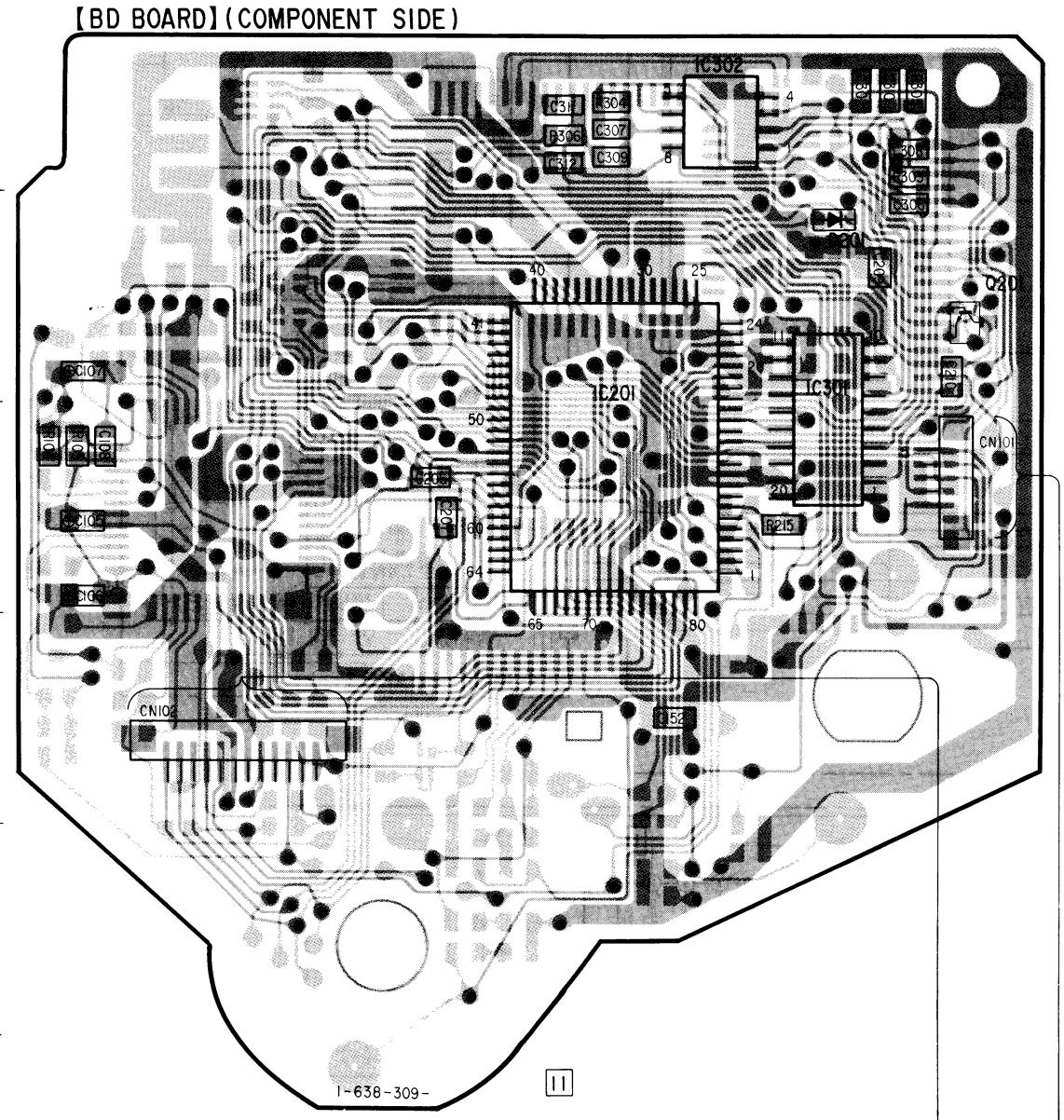

【BD BOARD】(CONDUCTOR SIDE)

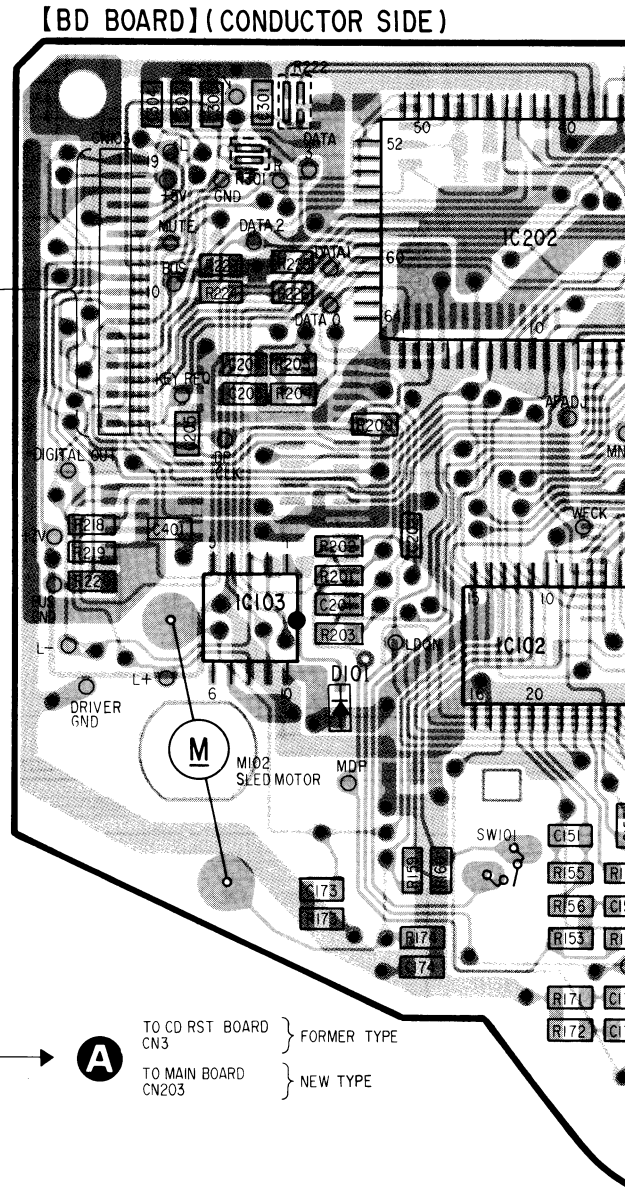

OPTICAL PICK-UP BLOCK (KSS-240A)

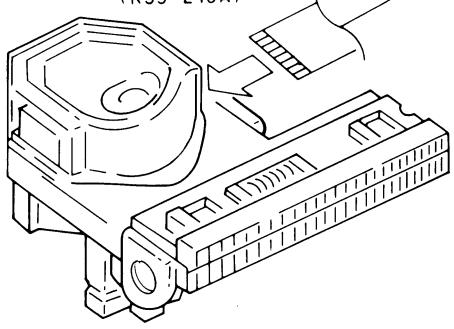

【LOADING BOARD】

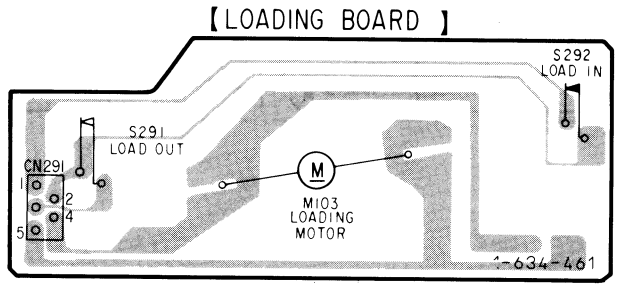

Note:

- ○—— : parts extracted from the component side.
- ● : Through hole.
- ▒ : Pattern on the side which is seen.
- ▒ : Pattern of the rear side.

IC204 CD4066BCM

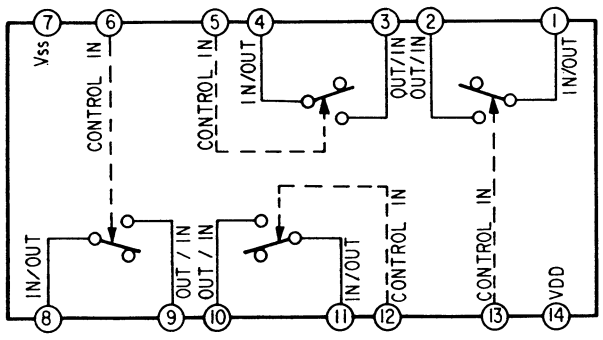

IC395 LB1639

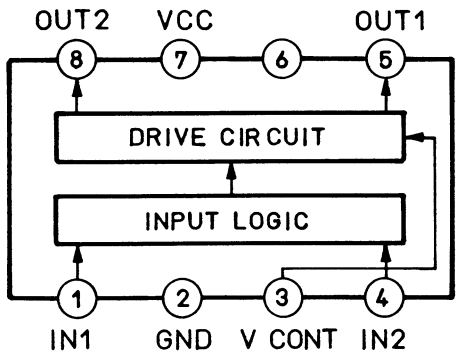

IC1 LA5601

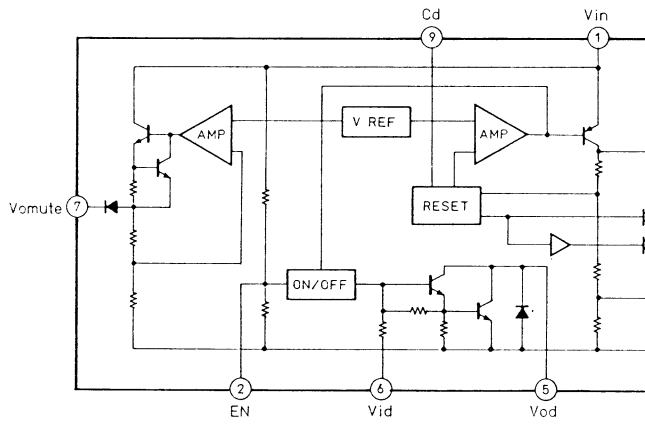

D4990AG

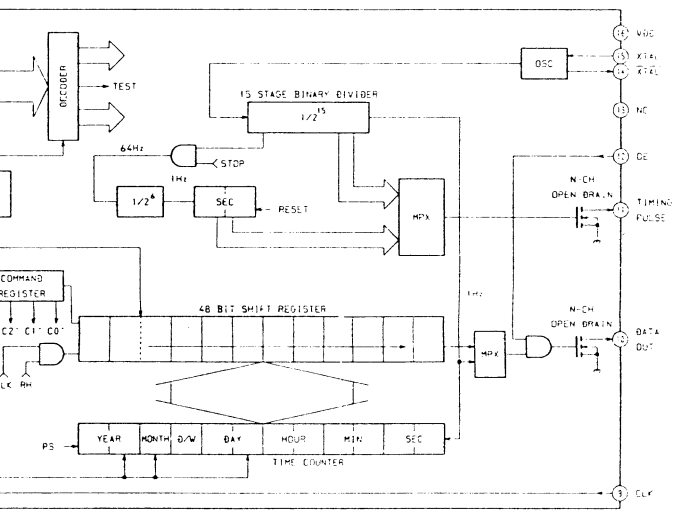

IC201 CXD2505Q

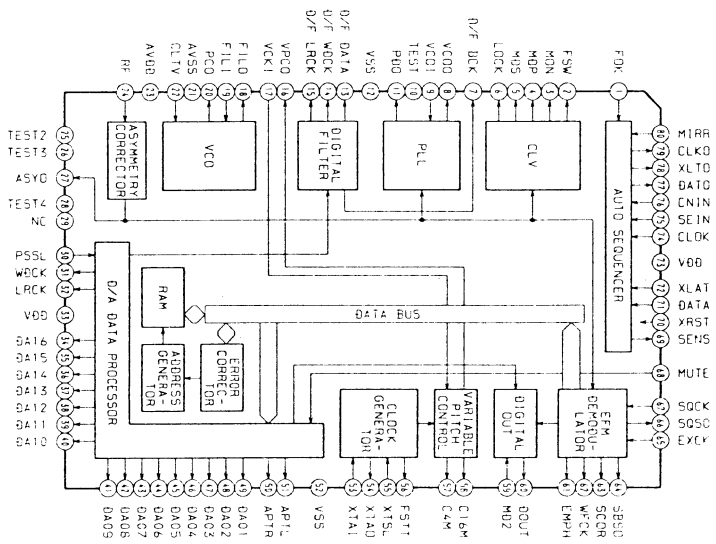

IC207 LA5603

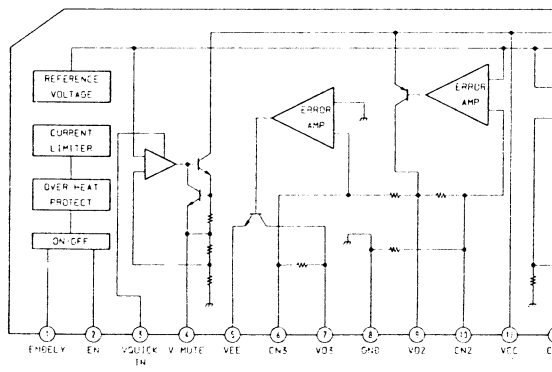

4-8. SCHEMATIC DIAGRAM — CD Section —

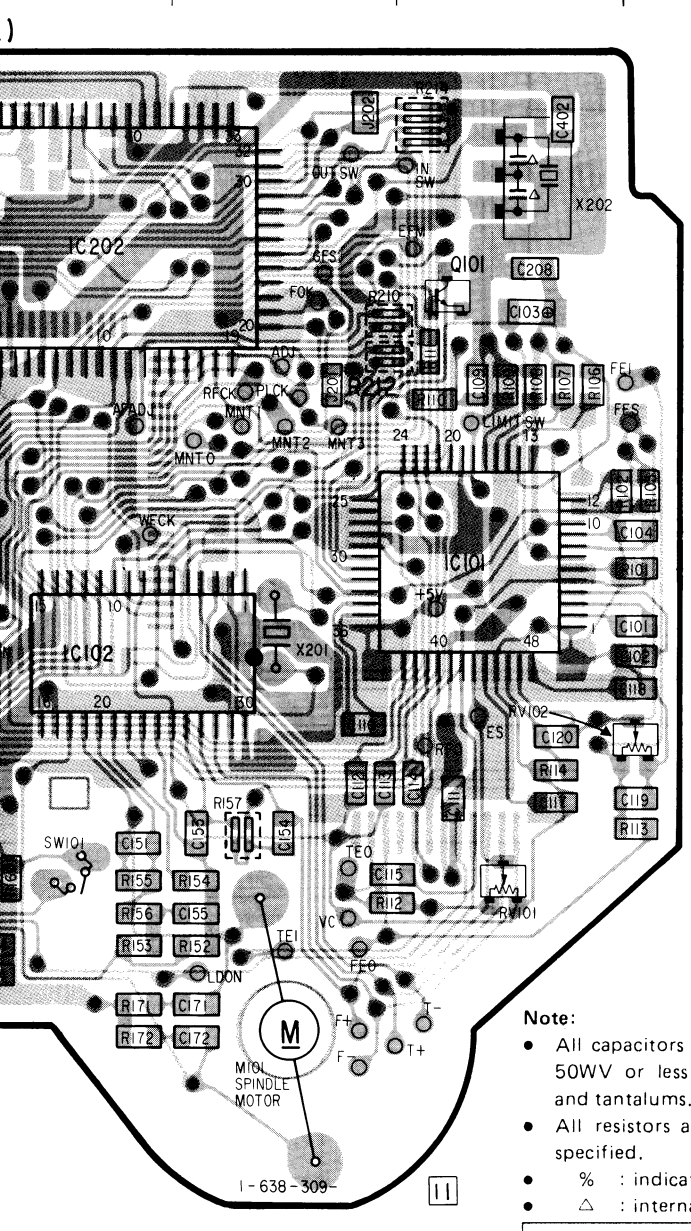

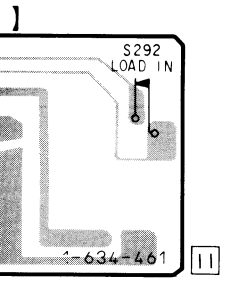

Note:

- All capacitors are in μF unless otherwise noted. pF: μμF 50WV or less are not indicated except for electrolytics and tantalums.
- All resistors are in Ω and ¼W or less unless otherwise specified.
- % : indicates tolerance.
- △ : internal component.

Note: The components identified by mark ⚠ or dotted line with mark ⚠ are critical for safety. Replace only with part number specified.

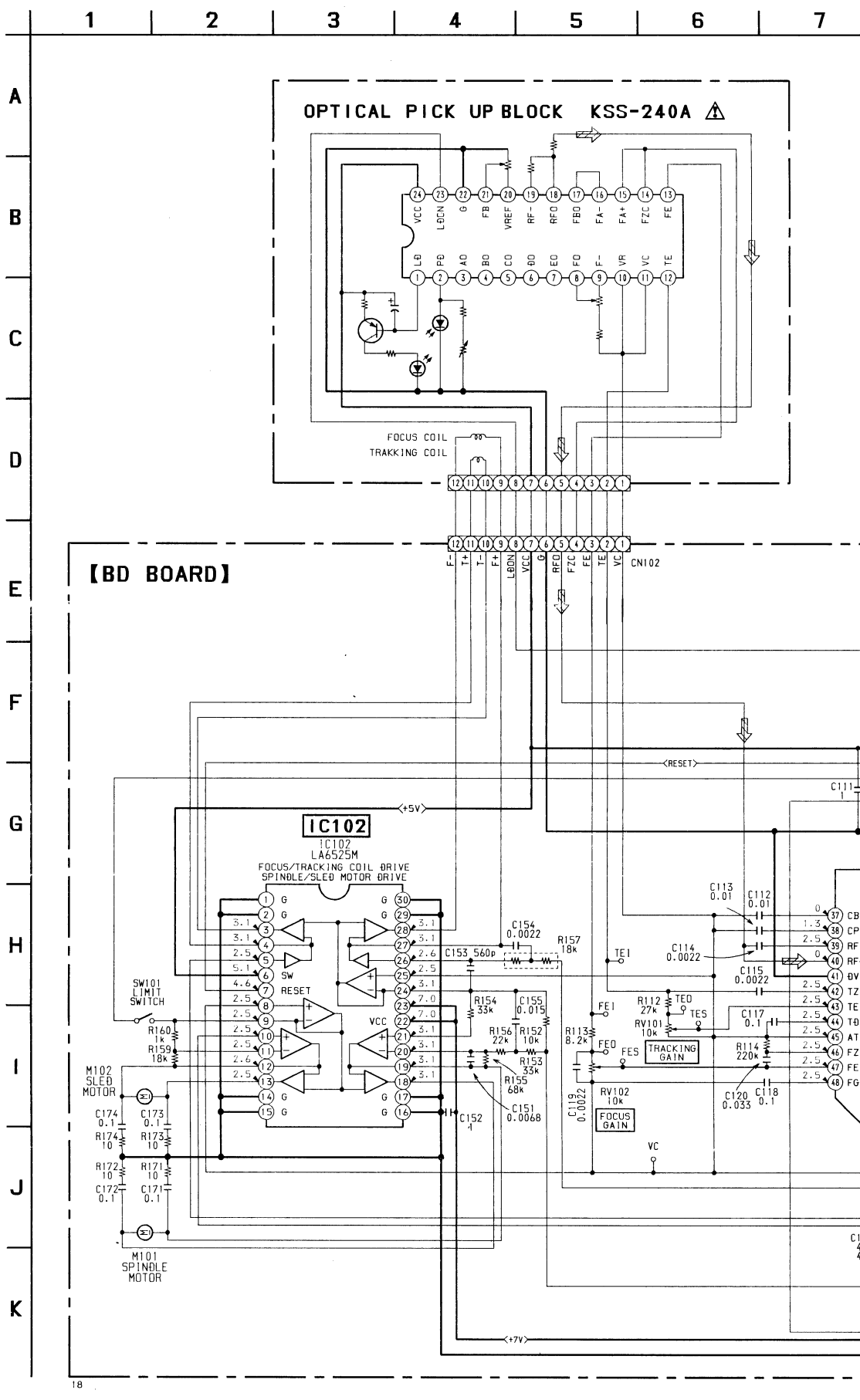

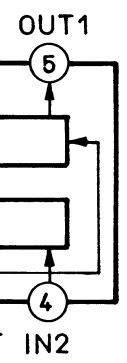

IC1 LA5601

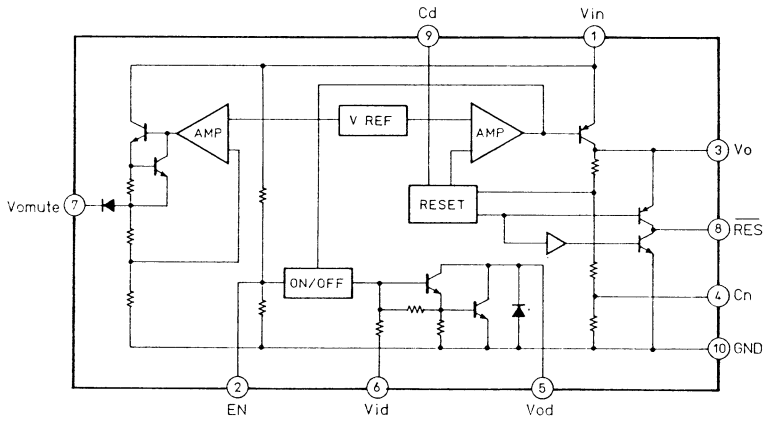

IC304 X24C01P

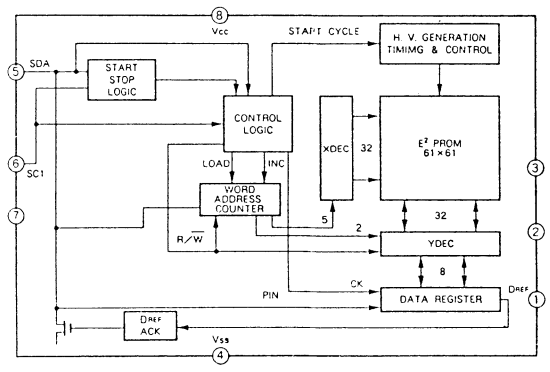

IC103 M54641FP

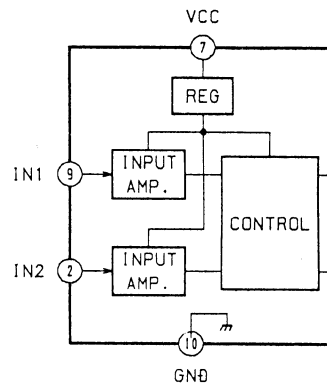

IC207 LA5603

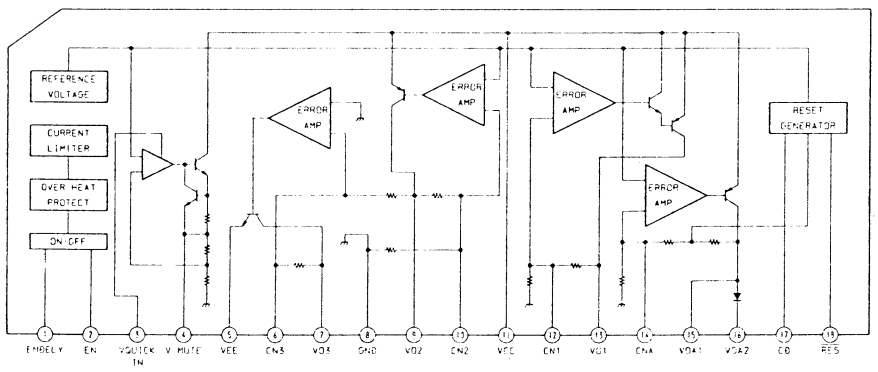

IC101 CXA1372Q

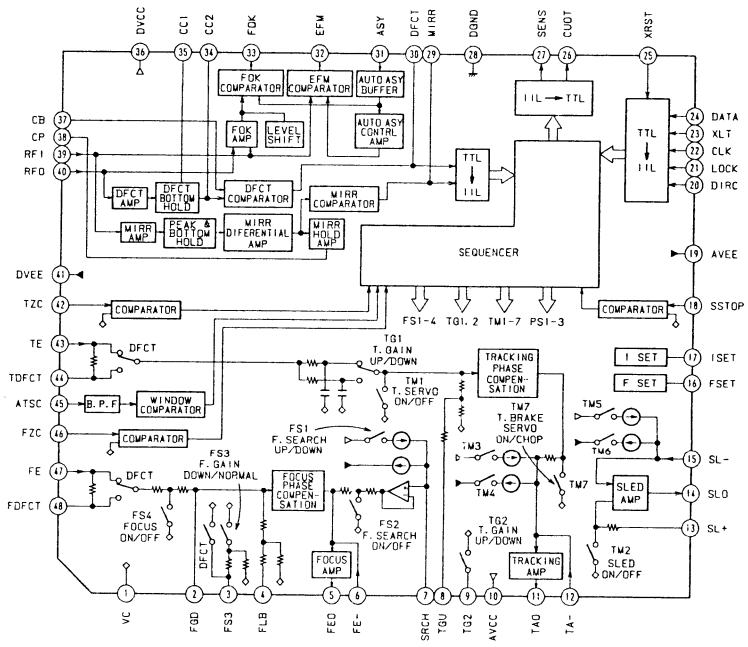

EMATIC DIAGRAM —— CD Section ——

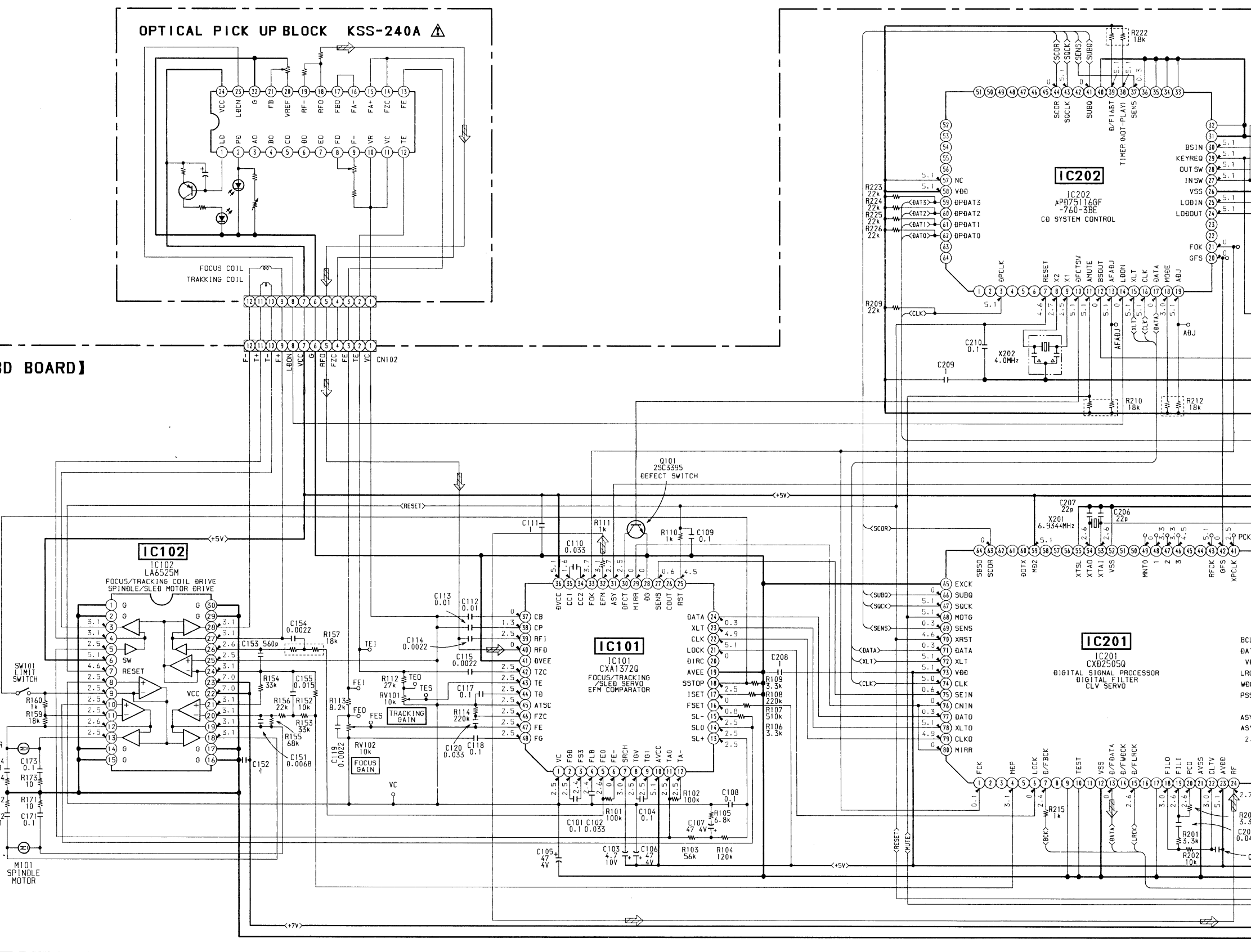

IC304 X24C01P

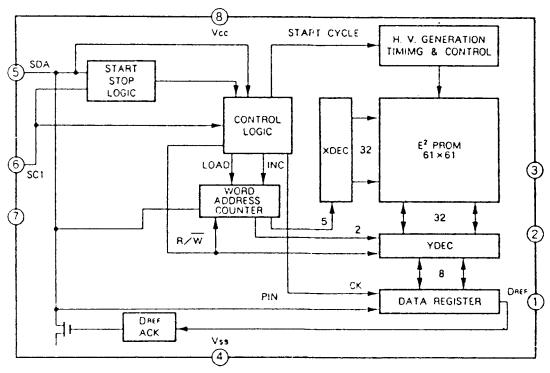

IC103 M54641FP

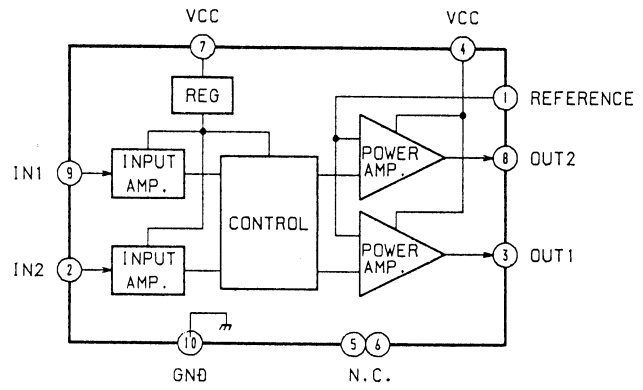

IC101 CXA1372Q

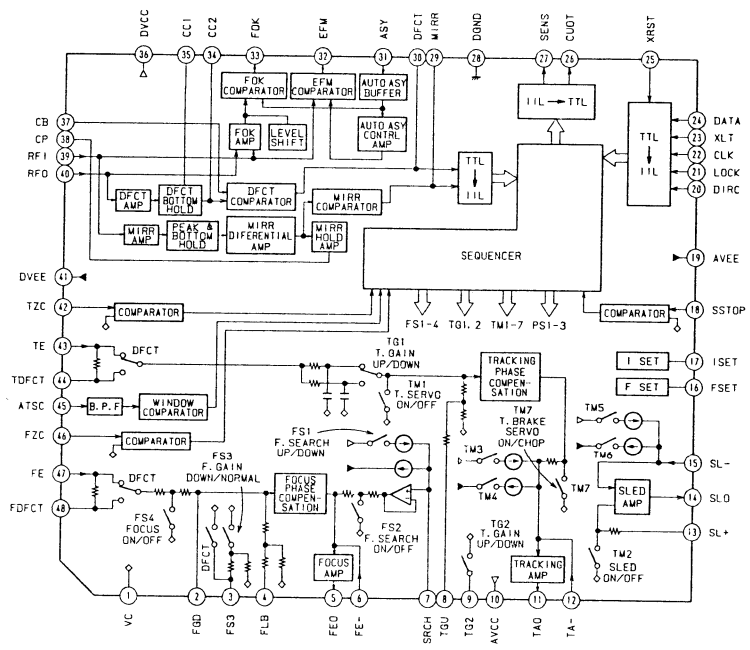

IC51 LA1851NM

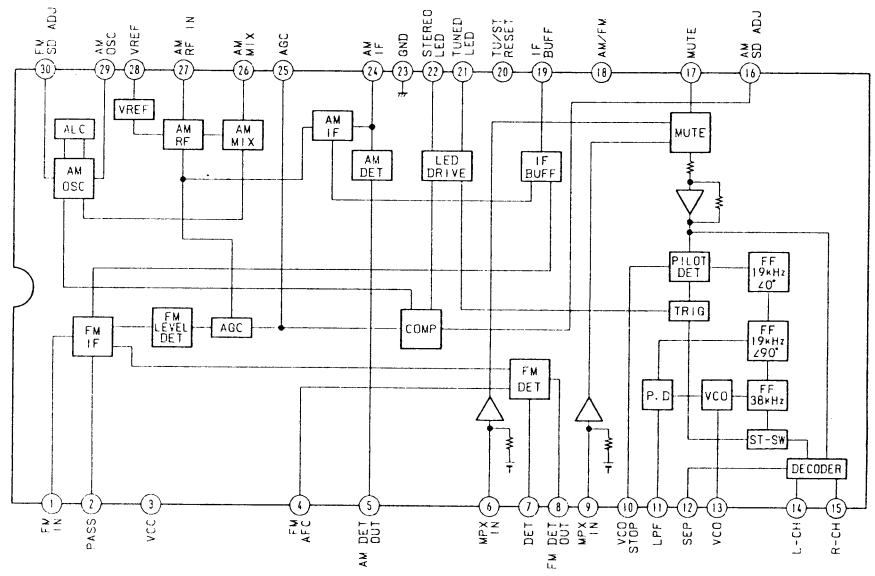

9 10 11 12 13 14 15 16 17 18 19 20 21 22

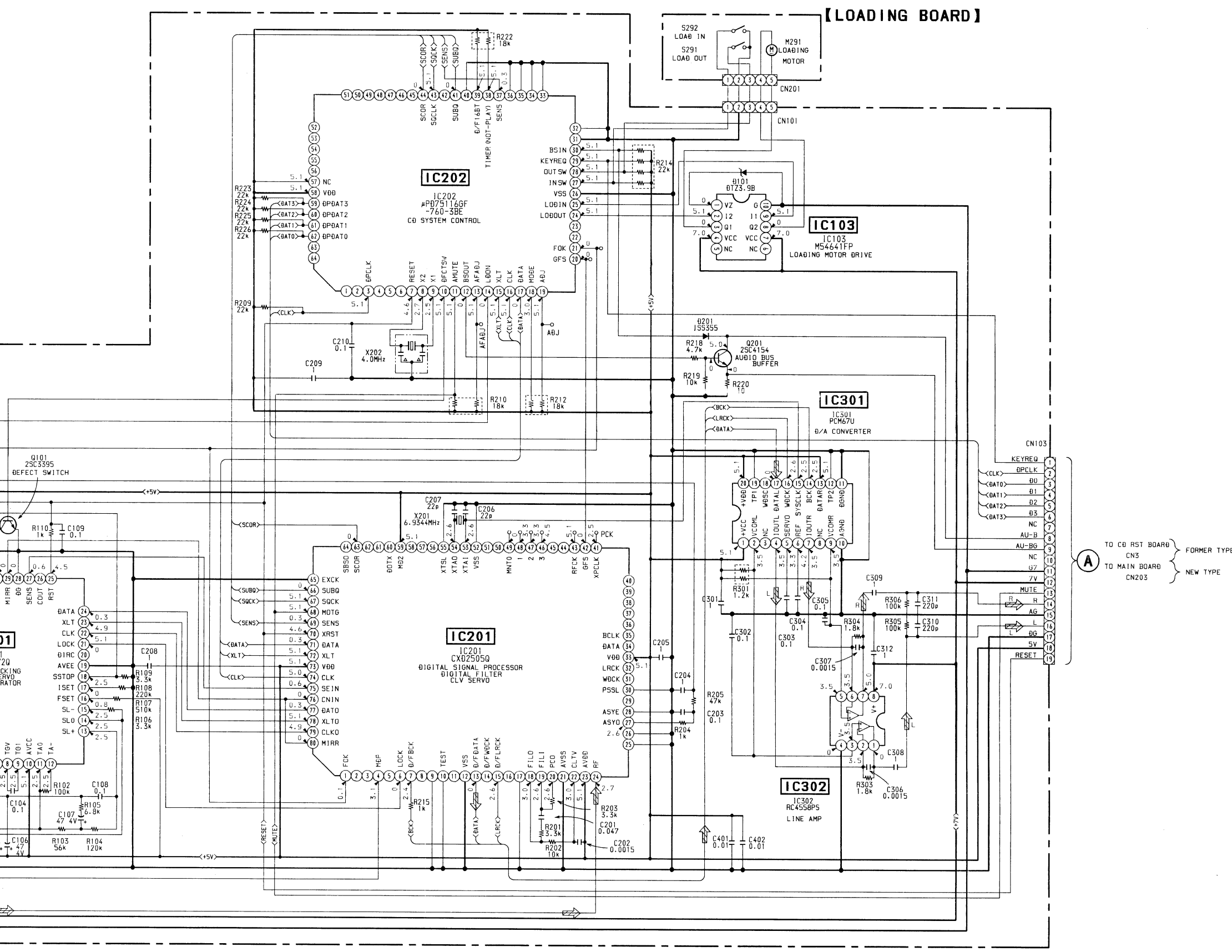

4-9. WAVEFORMS

① IC51⑬pin

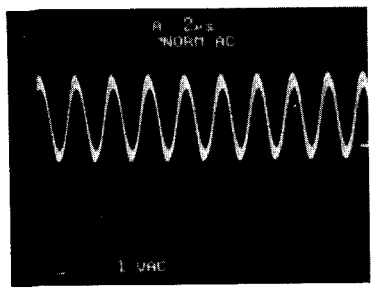

⑥IC305④ pin

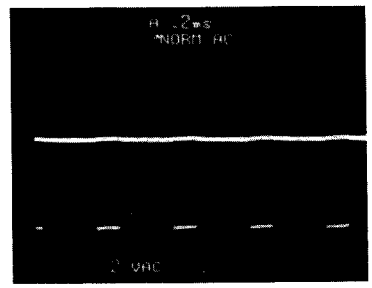

⑪IC303⑭ pin

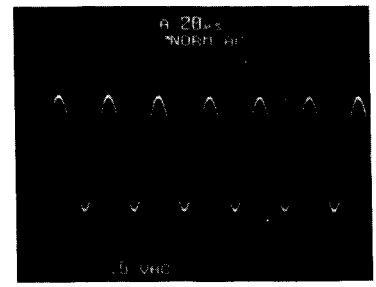

②IC21㉔ pin

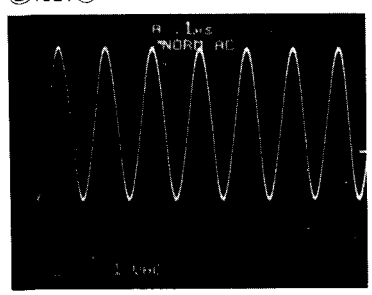

⑦IC305⑬ pin

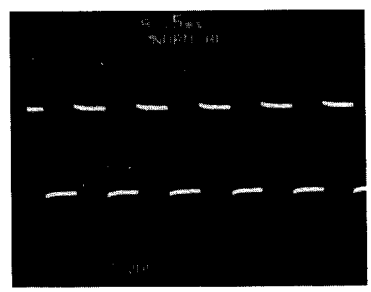

⑫IC307㉚,㉛ pin

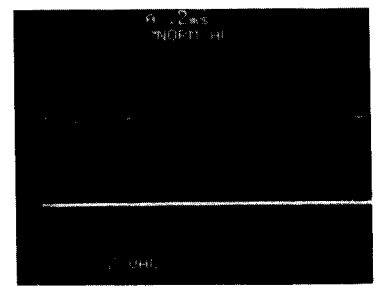

③IC21① pin

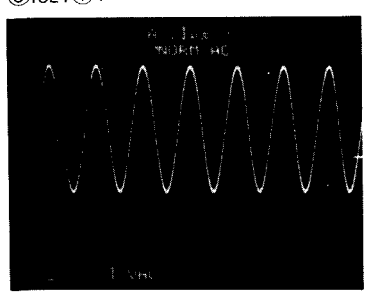

⑧IC305㉜ pin

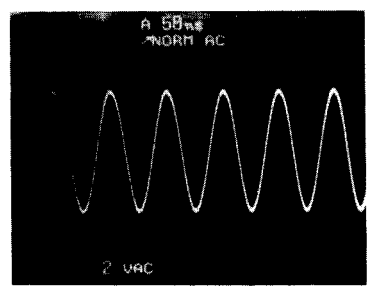

⑬IC307㉞ pin

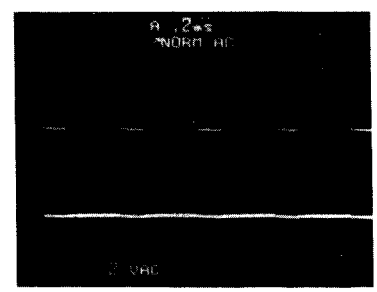

④IC305① pin

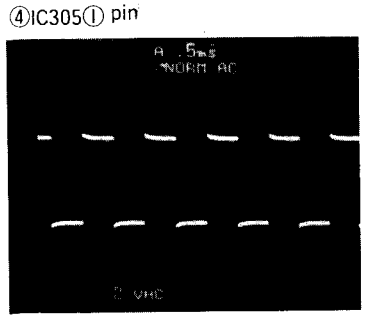

⑨IC305㉞ pin

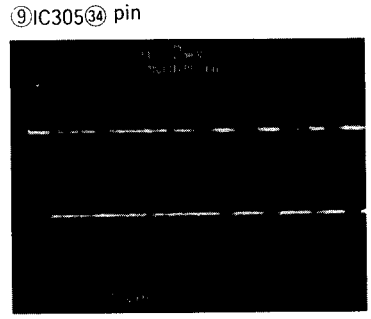

⑤IC305③ pin

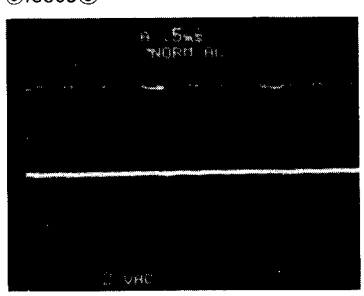

⑩IC305㉟ pin

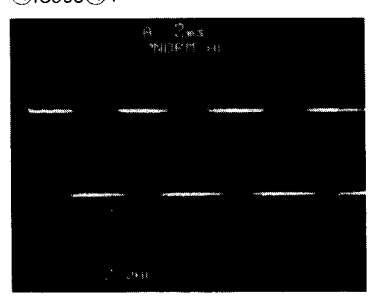

SECTION 5
EXPLODED VIEWS

NOTE:
- −XX, −X mean standardized parts, so they may have some differences from the original one.
- The mechanical parts with no reference number in the exploded views are not supplied.
- Items marked "*" are not stocked since they are seldom required for routine service. Some delay should be anticipated when ordering these items.

- Color Indication of Appearance Parts
  Example:
  KNOB, BALANCE(WHITE)...(RED)
  ↑ Part's Color ↑ Cabinet's Color
- Hardware (#mark) list is given in the last of this parts list.

NEW TYPE : AEP, G, IT, UK

FORMER TYPE : AEP, UK

G : Germany

IT : Italian

Note: The components identified by mark ⚠ or dotted line with mark ⚠ are critical for safety.
Replace only with part number specified.

5-1. FRONT PANEL SECTION

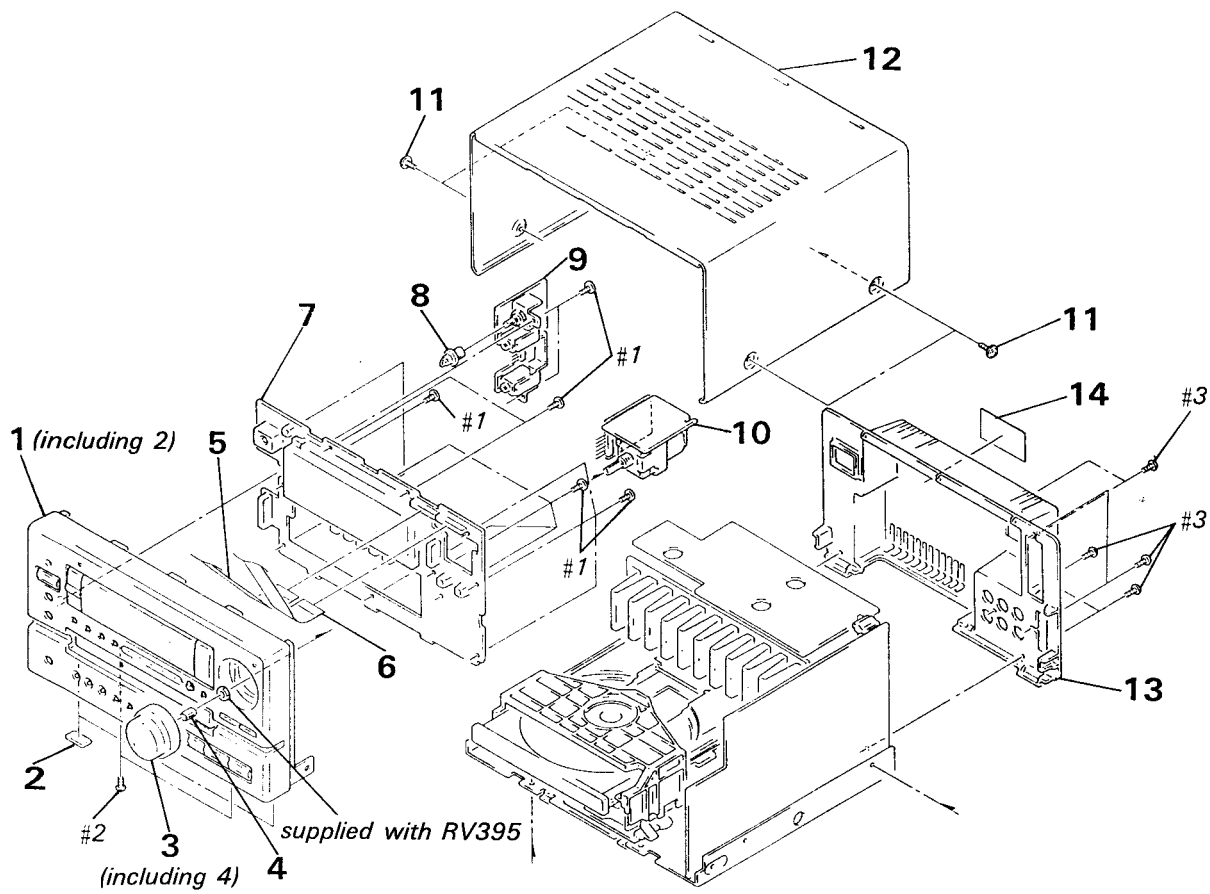

Ref. No.	Part No.	Description	Remark
1	X-4941-581-1	PANEL ASSY, FRONT	
2	4-930-336-01	FOOT (FELT)	
3	X-4941-489-1	KNOB (VOLUME) ASSY	
4	3-703-466-00	SPRING (6600)	
5	1-590-907-11	WIRE, FLAT TYPE (20 CORE)	
6	1-590-908-11	WIRE, FLAT TYPE (20 CORE)	
7	* A-4341-658-A	PANEL BOARD, COMPLETE (AEP, UK)	
7	* A-4341-707-A	PANEL BOARD, COMPLETE (IT)	
7	* A-4341-664-A	PANEL BOARD, COMPLETE (G)	
8	4-932-882-11	KNOB (HP, VOL)	
9	* 1-638-882-11	JACK BOARD	
10	* 1-638-884-11	VR BOARD	
11	3-704-366-01	SCREW (CASE) (M3X8)	
12	* 4-944-213-01	CASE	
13	* 4-944-211-21	PANEL, BACK	
14	* 4-941-548-01	LABEL, CLASS 1	

5-2. CHASSIS SECTION

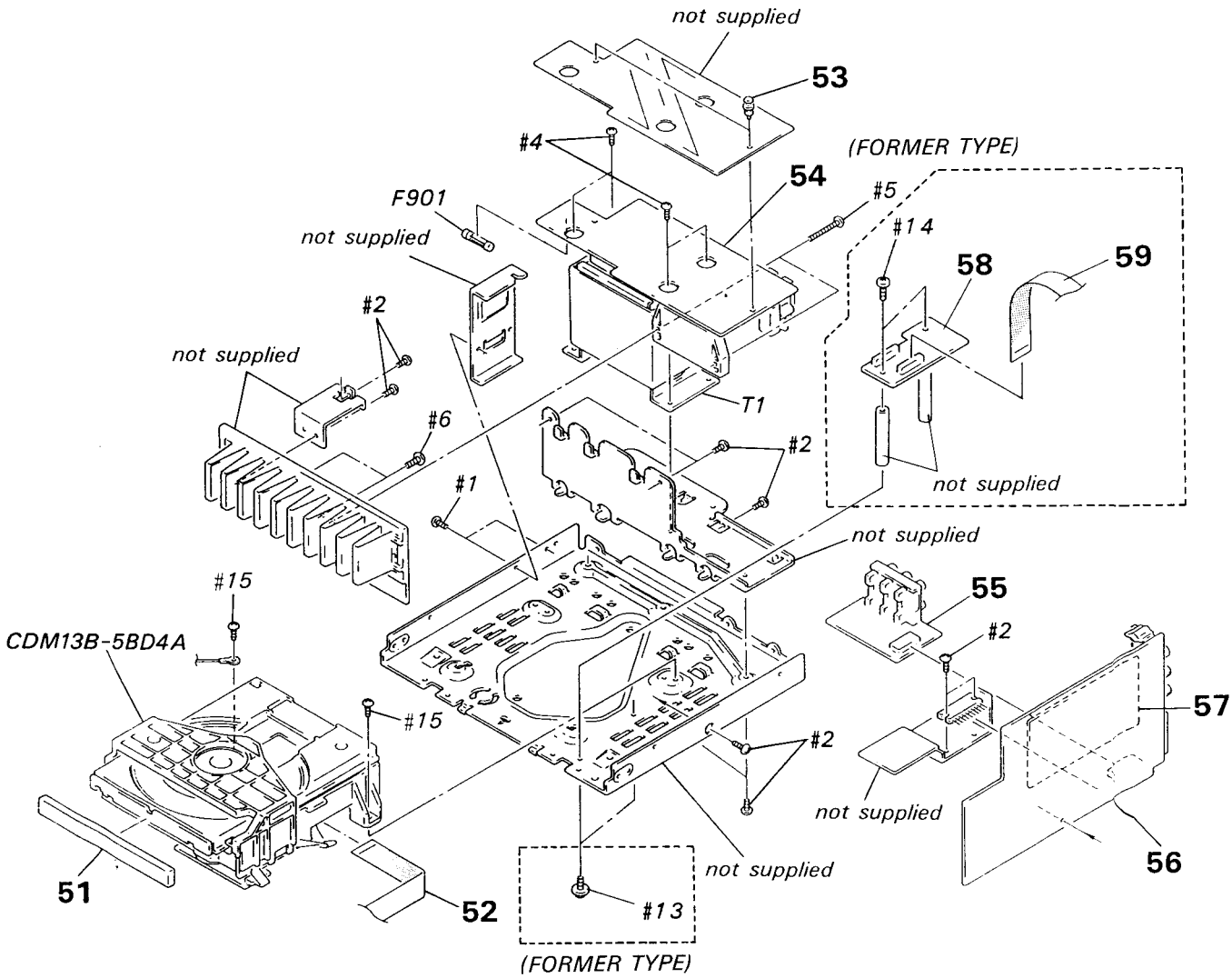

Ref. No.	Part No.	Description	Remark
51	4-944-199-01	PANEL, LOADING	
52	1-590-906-11	WIRE, FLAT TYPE (19 CORE)	
53	4-812-134-31	RIVET NYLON, 3.5	
54	* A-4341-652-A	POWER BOARD, COMPLETE (AEP, UK)	
54	* A-4341-653-A	POWER BOARD, COMPLETE (UK)	
54	* A-4341-661-A	POWER BOARD, COMPLETE (G)	
55	* 1-638-883-11	PIN JACK BOARD	
56	* A-4341-657-A	MAIN BOARD, COMPLETE (AEP, UK)	
56	* A-4341-662-A	MAIN BOARD, COMPLETE (G, IT)	
57	* A-4303-343-A	TCB011 BOARD, COMPLETE (AEP, UK)	
57	* A-4303-344-A	TCB011 BOARD, COMPLETE (G, IT)	
58	* 1-639-977-11	CD RST BOARD (FORMER TYPE)	
59	1-690-035-11	WIRE, FLAT TYPE (19 CORE) (FORMER TYPE)	
F901	⚠ 1-532-078-00	FUSE, TIME-LAG T1A	
T1	⚠ 1-450-412-11	TRANSFORMER, POWER	

Note: The components identified by mark ⚠ or dotted line with mark ⚠ are critical for safety.
Replace only with part number specified.

5-3. CD MECHANISM SECTION-1 (CDM13B-5BD4A)

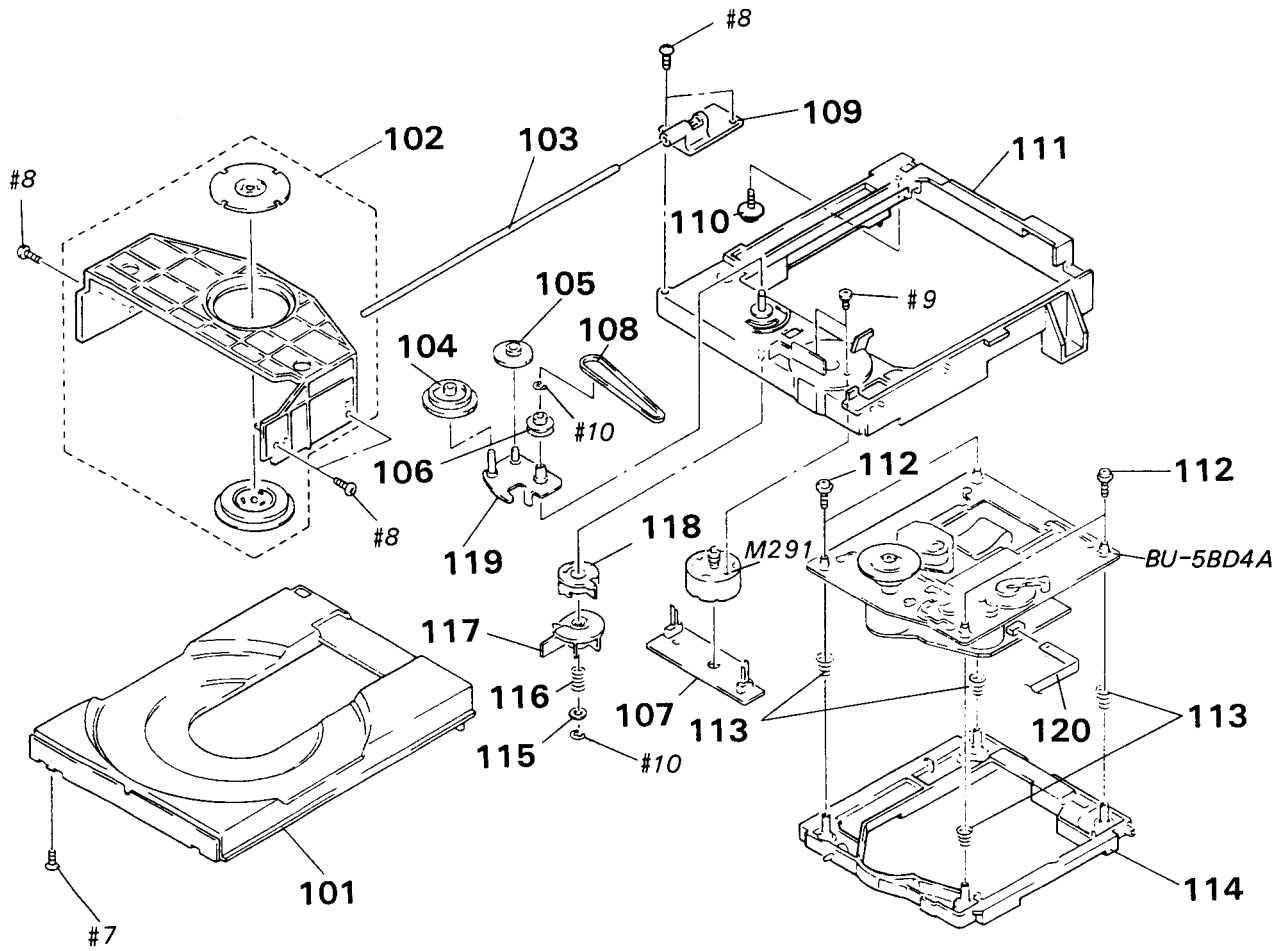

Ref. No.	Part No.	Description	Remark
101	4-944-012-01	TABLE, DISC	
102	A-4604-752-A	HOLDER (MG) ASSY	
103	4-929-764-01	SHAFT (TABLE GUIDE)	
104	4-927-620-11	GEAR (P)	
105	4-927-628-01	GEAR (C)	
106	4-929-724-01	PULLEY (B)	
107	* 1-638-308-11	LOADING BOARD	
108	4-927-649-01	BELT	
109	4-944-006-01	BEARING	
110	* 4-917-583-21	BRACKET, YOKE	
111	X-4941-462-1	CHASSIS (MD) ASSY	
112	4-933-134-01	SCREW (+PTPWH M2.6X6)	
113	4-917-541-01	SPRING (B)	
114	4-929-747-01	HOLDER (BU)	
115	4-927-654-01	WASHER (LIMITER)	
116	3-659-338-00	SPRING, COMPRESSION	
117	4-929-729-01	CAM (B)	
118	4-929-727-01	CAM (A)	
119	X-4929-703-1	ARM ASSY, SWING	
120	1-590-530-11	WIRE, FLAT TYPE	
M291	A-4608-362-A	MOTOR (L) ASSY	

5-4. CD MECHANISM SECTION-2 (BU-5BD4A)

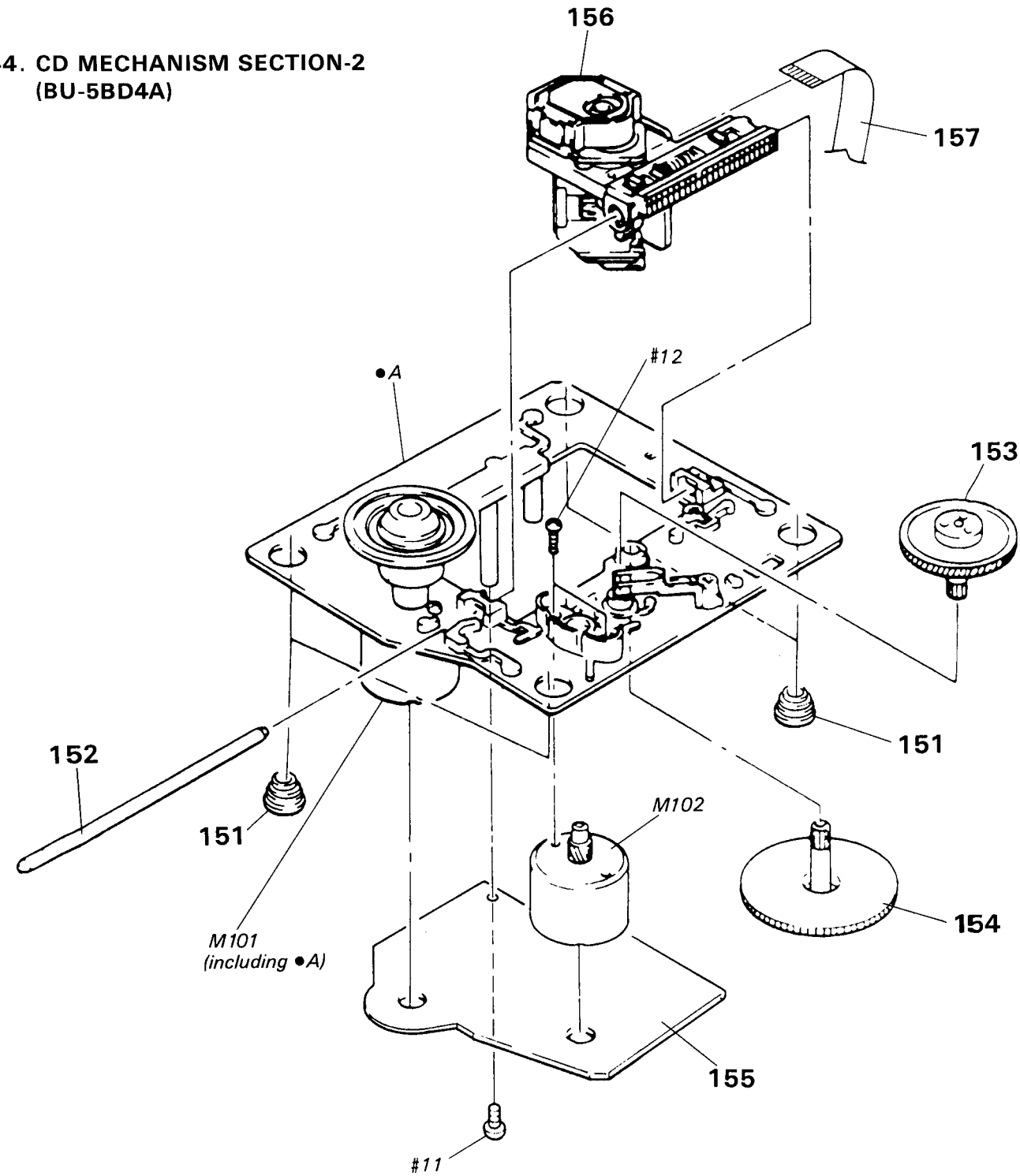

Ref. No.	Part No.	Description	Remark
151	4-933-126-01	INSULATOR (A)	
152	4-917-565-01	SHAFT, SLED	
153	4-917-567-01	GEAR (M)	
154	4-917-564-01	GEAR (P), FLATNESS	
155	* A-4617-936-A	BD BOARD, COMPLETE	
156	⚠8-848-144-11	DEVICE, OPTICAL KSS-240A	
157	1-575-001-11	WIRE, FLAT TYPE (12 CORE)	
M101	X-4917-523-3	MOTOR ASSY (SPINDLE)	
M102	X-4917-504-1	MORTOR ASSY (SLED)	

Note: The components identified by mark ⚠ or dotted line with mark ⚠ are critical for safety.
Replace only with part number specified.

BD

SECTION 6
ELECTRICAL PARTS LIST

NOTE:
- Due to standardization, replacements in the parts list may be different from the parts specified in the diagrams or the components used on the set.
- Items marked "*" are not stocked since they are seldom required for routine service. Some delay should be anticipated when ordering these items.
- −XX, −X mean standardized parts, so they may have some differences from the original one.
- RESISTORS
  All resistors are in ohms
  METAL : Metal-film resistor
  METAL OXIDE : Metal Oxide-film resistor
  F : nonflammable
- SEMICONDUCTORS
  In each case, u: μ, for example:
  uA··· : μA···, uPA··· : μPA···,
  uPB··· : μPB···, uPC··· : μPC···,
  uPD··· : μPD···
- CAPACITORS
  uF : μF
- COILS
  uH : μH

NEW TYPE : AEP, G, IT, UK

FORMER TYPE : AEP, UK

G : Germany

IT : Italian

Note: The components identified by mark ⚠ or dotted line with mark ⚠ are critical for safety.
Replace only with part number specified.

When indicating parts by reference number, please include the board name.

Ref. No.	Part No.	Description			Remark
	* A-4617-936-A	BD BOARD, COMPLETE			
		**********			
		< CAPACITOR >			
C101	1-163-038-00	CERAMIC CHIP	0.1uF		25V
C102	1-163-989-11	CERAMIC CHIP	0.033uF	10%	25V
C103	1-135-155-21	TANTALUM CHIP	4.7uF	10%	10V
C104	1-163-038-00	CERAMIC CHIP	0.1uF		25V
C105	1-126-607-11	ELECT CHIP	47uF	20%	4V
C106	1-126-607-11	ELECT CHIP	47uF	20%	4V
C107	1-126-607-11	ELECT CHIP	47uF	20%	4V
C108	1-163-038-00	CERAMIC CHIP	0.1uF		25V
C109	1-163-038-00	CERAMIC CHIP	0.1uF		25V
C110	1-163-989-11	CERAMIC CHIP	0.033uF	10%	25V
C111	1-164-346-11	CERAMIC CHIP	1uF		16V
C112	1-164-232-11	CERAMIC CHIP	0.01uF		50V
C113	1-164-232-11	CERAMIC CHIP	0.01uF		50V
C114	1-164-695-11	CERAMIC CHIP	0.0022uF	5%	50V
C115	1-164-695-11	CERAMIC CHIP	0.0022uF	5%	50V
C117	1-163-038-00	CERAMIC CHIP	0.1uF		25V
C118	1-163-038-00	CERAMIC CHIP	0.1uF		25V
C119	1-164-695-11	CERAMIC CHIP	0.0022uF	5%	50V
C120	1-163-989-11	CERAMIC CHIP	0.033uF	10%	25V
C151	1-163-019-00	CERAMIC CHIP	0.0068uF	10%	50V
C152	1-164-346-11	CERAMIC CHIP	1uF		16V
C153	1-163-135-00	CERAMIC CHIP	560PF	5%	50V
C154	1-164-695-11	CERAMIC CHIP	0.0022uF	5%	50V
C155	1-163-023-00	CERAMIC CHIP	0.015uF	5%	50V
C171	1-163-038-00	CERAMIC CHIP	0.1uF		25V
C172	1-163-038-00	CERAMIC CHIP	0.1uF		25V
C173	1-163-038-00	CERAMIC CHIP	0.1uF		25V
C174	1-163-038-00	CERAMIC CHIP	0.1uF		25V
C201	1-163-809-11	CERAMIC CHIP	0.047uF	10%	25V
C202	1-163-145-00	CERAMIC CHIP	0.0015uF	5%	50V
C203	1-163-038-00	CERAMIC CHIP	0.1uF		25V
C204	1-164-346-11	CERAMIC CHIP	1uF		16V
C205	1-164-346-11	CERAMIC CHIP	1uF		16V
C206	1-163-101-00	CERAMIC CHIP	22PF	5%	50V
C207	1-163-101-00	CERAMIC CHIP	22PF	5%	50V
C208	1-164-346-11	CERAMIC CHIP	1uF		16V
C209	1-164-346-11	CERAMIC CHIP	1uF		16V
C210	1-163-038-00	CERAMIC CHIP	0.1uF		25V
C301	1-164-346-11	CERAMIC CHIP	1uF		16V
C302	1-163-038-00	CERAMIC CHIP	0.1uF		25V
C303	1-163-038-00	CERAMIC CHIP	0.1uF		25V
C304	1-163-038-00	CERAMIC CHIP	0.1uF		25V
C305	1-163-038-00	CERAMIC CHIP	0.1uF		25V
C306	1-163-145-00	CERAMIC CHIP	0.0015uF	5%	50V
C307	1-163-145-00	CERAMIC CHIP	0.0015uF	5%	50V
C308	1-164-346-11	CERAMIC CHIP	1uF		16V
C309	1-164-346-11	CERAMIC CHIP	1uF		16V
C310	1-163-125-00	CERAMIC CHIP	220PF	5%	50V
C311	1-163-125-00	CERAMIC CHIP	220PF	5%	50V
C312	1-164-346-11	CERAMIC CHIP	1uF		16V
C401	1-163-038-00	CERAMIC CHIP	0.1uF		25V
C402	1-163-038-00	CERAMIC CHIP	0.1uF		25V
		< CONNECTOR >			
CN101	1-580-858-11	SOCKET, CONNECTOR (SMT) 5P			
CN102	1-580-866-11	SOCKET, CONNECTOR (SMT) 12P			
CN103	1-580-872-41	SOCKET, CONNECTOR (SMT) 19P			
		< DIODE >			
D101	8-719-976-88	DIODE	DTZ3.9B		
D201	8-719-988-62	DIODE	1SS355		

BD CD RST

Ref.No.	Part No.	Description				Remark
		< IC >				
IC101	8-752-050-82	IC	CXA1372Q			
IC102	8-759-823-48	IC	LA6525M			
IC103	8-759-636-20	IC	M54641FP			
IC201	8-752-340-37	IC	CXD2505Q			
IC202	8-759-153-16	IC	uPD75116GF-760-3BE			
IC301	8-759-506-63	IC	PCM67U			
IC302	8-759-981-95	IC	RC4558S			
		< CHIP JUMPER >				
J201	1-216-295-11	METAL CHIP	0	5%	1/10W	
J202	1-216-295-11	METAL CHIP	0	5%	1/10W	
		< TRANSISTOR >				
Q101	8-729-805-45	TRANSISTOR	2SC3395			
Q201	8-729-602-21	TRANSISTOR	2SC4154-F			
		< RESISTOR >				
R101	1-216-097-00	METAL CHIP	100K	5%	1/10W	
R102	1-216-097-00	METAL CHIP	100K	5%	1/10W	
R103	1-216-091-00	METAL CHIP	56K	5%	1/10W	
R104	1-216-099-00	METAL CHIP	120K	5%	1/10W	
R105	1-216-069-00	METAL CHIP	6.8K	5%	1/10W	
R106	1-216-061-00	METAL CHIP	3.3K	5%	1/10W	
R107	1-216-114-00	METAL GLAZE	510K	5%	1/10W	
R108	1-216-105-00	METAL CHIP	220K	5%	1/10W	
R109	1-216-061-00	METAL CHIP	3.3K	5%	1/10W	
R110	1-216-049-00	METAL CHIP	1K	5%	1/10W	
R111	1-216-049-00	METAL CHIP	1K	5%	1/10W	
R112	1-216-083-00	METAL CHIP	27K	5%	1/10W	
R113	1-216-071-00	METAL CHIP	8.2K	5%	1/10W	
R114	1-216-105-00	METAL CHIP	220K	5%	1/10W	
R152	1-216-073-00	METAL CHIP	10K	5%	1/10W	
R153	1-216-085-00	METAL CHIP	33K	5%	1/10W	
R154	1-216-085-00	METAL CHIP	33K	5%	1/10W	
R155	1-216-093-00	METAL CHIP	68K	5%	1/10W	
R156	1-216-081-00	METAL CHIP	22K	5%	1/10W	
R157	1-236-427-11	NETWORK, RES	18K			
R159	1-216-079-00	METAL CHIP	18K	5%	1/10W	
R160	1-216-049-00	METAL CHIP	1K	5%	1/10W	
R171	1-216-001-00	METAL CHIP	10	5%	1/10W	
R172	1-216-001-00	METAL CHIP	10	5%	1/10W	
R173	1-216-001-00	METAL CHIP	10	5%	1/10W	
R174	1-216-001-00	METAL CHIP	10	5%	1/10W	
R201	1-216-061-00	METAL CHIP	3.3K	5%	1/10W	
R202	1-216-073-00	METAL CHIP	10K	5%	1/10W	
R203	1-216-061-00	METAL CHIP	3.3K	5%	1/10W	
R204	1-216-049-00	METAL CHIP	1K	5%	1/10W	
R205	1-216-089-00	METAL CHIP	47K	5%	1/10W	
R209	1-216-081-00	METAL CHIP	22K	5%	1/10W	
R210	1-236-427-11	NETWORK, RES	18K			
R212	1-236-427-11	NETWORK, RES	18K			
R214	1-239-039-11	RESISTOR, NETWORK	22K			
R215	1-216-049-00	METAL CHIP	1K	5%	1/10W	
R218	1-216-065-00	METAL CHIP	4.7K	5%	1/10W	
R219	1-216-073-00	METAL CHIP	10K	5%	1/10W	
R220	1-216-001-00	METAL CHIP	10	5%	1/10W	
R222	1-236-427-11	NETWORK, RES	18K			
R223	1-216-081-00	METAL CHIP	22K	5%	1/10W	
R224	1-216-081-00	METAL CHIP	22K	5%	1/10W	
R225	1-216-081-00	METAL CHIP	22K	5%	1/10W	
R226	1-216-081-00	METAL CHIP	22K	5%	1/10W	
R301	1-236-413-11	NETWORK, RES	1.2K			
R303	1-216-055-00	METAL CHIP	1.8K	5%	1/10W	
R304	1-216-055-00	METAL CHIP	1.8K	5%	1/10W	
R305	1-216-097-00	METAL CHIP	100K	5%	1/10W	
R306	1-216-097-00	METAL CHIP	100K	5%	1/10W	
		< VARIABLE RESISTOR >				
RV101	1-241-395-11	RES, ADJ, METAL GLAZE	10K			
RV102	1-241-395-11	RES, ADJ, METAL GLAZE	10K			
		< SWITCH >				
SW101	1-572-085-11	SWITCH, LEAF (LIMIT)				
		< CRYSTAL >				
X201	1-579-280-11	VIBRATOR, CRYSTAL	6.9344MHz			
X202	1-579-216-11	VIBRATOR, CERAMIC	4MHz			

****

* 1-639-977-11 CD RST BOARD (FORMER TYPE)

****

		< CAPACITOR >				
C1	1-126-925-11	ELECT	470uF	20%	10V	
C2	1-126-933-11	ELECT	100uF	20%	10V	
C3	1-126-933-11	ELECT	100uF	20%	10V	
C4	1-126-933-11	ELECT	100uF	20%	10V	
C5	1-126-933-11	ELECT	1uF	20%	10V	
C6	1-126-933-11	ELECT	1uF	20%	10V	
		< CONNECTOR >				
CN1	* 1-564-706-11	CONNECTOR PIN 4P				
CN2	* 1-573-149-11	CONNECTR PIN				
CN3	* 1-573-149-11	CONNECTR PIN				

CD RST | LOADING | MAIN | PANEL | JACK | PIN JACK | VR

Ref. No.	Part No.	Description			Remark
		< DIODE >			
D1	8-719-912-20	DIODE 1SS120			
D2	8-719-912-20	DIODE 1SS120			
D3	8-719-912-20	DIODE 1SS120			
		< IC >			
IC1	8-759-821-93	IC LA5601			
IC2	8-759-916-12	IC SN74HC00AN			
		< TRANSISTOR >			
Q1	8-729-620-02	TRANSISTOR 2SA1115-EF			
Q2	8-729-620-05	TRANSISTOR 2SA2603-EF			
		< RESISTOR >			
R1	1-249-421-11	CARBON	2.2K	5%	1/4W
R2	1-249-397-11	CARBON	22	5%	1/4W
R3	1-249-421-11	CARBON	2.2K	5%	1/4W
R4	1-249-433-11	CARBON	22K	5%	1/4W
R5	1-249-405-11	CARBON	100	5%	1/4W
R6	1-249-405-11	CARBON	100	5%	1/4W

****

* 1-638-308-11 LOADING BOARD
****

< CONNECTOR >

CN201	1-580-918-11	HOUSING, CONNECTOR 5P

< SWITCH >

S291	1-571-924-11	SWITCH, LEAF (LOAD OUT)
S292	1-571-924-11	SWITCH, LEAF (LOAD IN)

****

* A-4341-657-A MAIN BOARD, COMPLETE (AEP, UK)
* A-4341-662-A MAIN BOARD, COMPLETE (G, IT)
****

* A-4341-658-A PANEL BOARD, COMPLETE (AEP, UK)
* A-4341-664-A PANEL BOARD, COMPLETE (G)
* A-4341-707-A PANEL BOARD, COMPLETE (IT)
****

* 1-638-882-11 JACK BOARD
****

* 1-638-883-11 PIN JACK BOARD
****

Ref. No.	Part No.	Description			Remark
	* 1-638-884-11	VR BOARD			
		********			
	* 4-944-202-01	HOLDER (FL)			
	* 4-946-050-11	CUSHION (FL)			
	7-685-646-79	SCREW +BVTP 3X8 TYPE2 N-S			
		< CAPACITOR >			
C1	1-126-925-11	ELECT	470uF	20%	10V (NEW TYPE)
C2	1-126-933-11	ELECT	100uF	20%	16V (NEW TYPE)
C3	1-126-933-11	ELECT	100uF	20%	16V (NEW TYPE)
C4	1-126-933-11	ELECT	100uF	20%	16V (NEW TYPE)
C5	1-164-346-11	CERAMIC CHIP	1uF		16V (NEW TYPE)
C6	1-164-346-11	CERAMIC CHIP	1uF		16V (NEW TYPE)
C101	1-163-117-00	CERAMIC CHIP	100PF	5%	50V
C102	1-163-117-00	CERAMIC CHIP	100PF	5%	50V
C103	1-163-117-00	CERAMIC CHIP	100PF	5%	50V
C104	1-126-157-11	ELECT	10uF	20%	16V
C105	1-164-232-11	CERAMIC CHIP	0.01uF		50V
C106	1-163-018-00	CERAMIC CHIP	0.0056uF	5%	50V
C107	1-163-012-00	CERAMIC CHIP	0.0018uF	10%	50V
C108	1-164-346-11	CERAMIC CHIP	1uF		16V
C109	1-163-117-00	CERAMIC CHIP	100PF	5%	50V (AEP, UK)
C109	1-163-125-00	CERAMIC CHIP	220PF	5%	50V (G, IT)
C110	1-163-117-00	CERAMIC CHIP	100PF	5%	50V
C151	1-163-117-00	CERAMIC CHIP	100PF	5%	50V
C152	1-163-117-00	CERAMIC CHIP	100PF	5%	50V
C153	1-163-117-00	CERAMIC CHIP	100PF	5%	50V
C154	1-126-157-11	ELECT	10uF	20%	16V
C155	1-164-232-11	CERAMIC CHIP	0.01uF		50V
C156	1-163-018-00	CERAMIC CHIP	0.0056uF	5%	50V
C157	1-163-012-00	CERAMIC CHIP	0.0018uF	10%	50V
C158	1-164-346-11	CERAMIC CHIP	1uF		16V
C159	1-163-117-00	CERAMIC CHIP	100PF	5%	50V (AEP, UK)
C159	1-163-125-00	CERAMIC CHIP	220PF	5%	50V (G, IT)
C160	1-163-117-00	CERAMIC CHIP	100PF	5%	50V
C203	1-163-117-00	CERAMIC CHIP	100PF	5%	50V
C204	1-164-222-11	CERAMIC CHIP	0.22uF		25V
C205	1-164-492-11	CERAMIC CHIP	0.15uF	10%	16V
C206	1-163-038-00	CERAMIC CHIP	0.1uF		25V
C207	1-164-343-11	CERAMIC CHIP	0.056uF	10%	25V
C208	1-163-035-00	CERAMIC CHIP	0.047uF		50V
C209	1-163-033-00	CERAMIC CHIP	0.022uF		50V
C210	1-163-024-00	CERAMIC CHIP	0.018uF	10%	50V
C211	1-164-232-11	CERAMIC CHIP	0.01uF		50V

MAIN | PANEL | JACK | PIN JACK | VR

Ref. No.	Part No.	Description			Remark
C212	1-163-019-00	CERAMIC CHIP	0.0068uF	10%	50V
C213	1-163-016-00	CERAMIC CHIP	0.0039uF	10%	50V
C214	1-163-014-00	CERAMIC CHIP	0.0027uF	10%	50V
C215	1-163-011-11	CERAMIC CHIP	0.0015uF	10%	50V
C216	1-163-010-11	CERAMIC CHIP	0.0012uF	10%	50V
C217	1-163-137-00	CERAMIC CHIP	680PF	5%	50V
C218	1-126-163-11	ELECT	4.7uF	20%	50V
C219	1-163-117-00	CERAMIC CHIP	100PF	5%	50V
C220	1-126-163-11	ELECT	4.7uF	20%	50V
C221	1-126-163-11	ELECT	4.7uF	20%	50V
C222	1-163-005-11	CERAMIC CHIP	470PF	10%	50V
C223	1-126-163-11	ELECT	4.7uF	20%	50V
C224	1-163-833-00	CERAMIC CHIP	0.068uF		25V
C225	1-126-163-11	ELECT	4.7uF	20%	50V
C226	1-163-833-00	CERAMIC CHIP	0.068uF		25V
C229	1-163-005-11	CERAMIC CHIP	470PF	10%	50V
C230	1-163-005-11	CERAMIC CHIP	470PF	10%	50V
C231	1-126-096-11	ELECT	10uF	20%	35V
C232	1-126-163-11	ELECT	4.7uF	20%	50V
C233	1-163-038-00	CERAMIC CHIP	0.1uF		25V
C234	1-164-505-11	CERAMIC CHIP	2.2uF		16V
C236	1-163-035-00	CERAMIC CHIP	0.047uF		50V
C237	1-126-935-11	ELECT	470uF	20%	16V
C238	1-164-232-11	CERAMIC CHIP	0.01uF		50V
C239	1-126-933-11	ELECT	100uF	20%	16V
C241	1-163-038-00	CERAMIC CHIP	0.1uF		25V
C243	1-136-173-00	FILM	0.47uF	5%	50V
C244	1-136-173-00	FILM	0.47uF	5%	50V
C245	1-126-163-11	ELECT	4.7uF	20%	50V
C246	1-126-933-11	ELECT	100uF	20%	16V
C247	1-126-933-11	ELECT	100uF	20%	16V
C253	1-163-117-00	CERAMIC CHIP	100PF	5%	50V
C254	1-164-222-11	CERAMIC CHIP	0.22uF		25V
C255	1-164-492-11	CERAMIC CHIP	0.15uF	10%	16V
C256	1-163-038-00	CERAMIC CHIP	0.1uF		25V
C257	1-164-343-11	CERAMIC CHIP	0.056uF	10%	25V
C258	1-163-035-00	CERAMIC CHIP	0.047uF		50V
C259	1-163-033-00	CERAMIC CHIP	0.022uF		50V
C260	1-163-024-00	CERAMIC CHIP	0.018uF	10%	50V
C261	1-164-232-11	CERAMIC CHIP	0.01uF		50V
C262	1-163-019-00	CERAMIC CHIP	0.0068uF	10%	50V
C263	1-163-016-00	CERAMIC CHIP	0.0039uF	10%	50V
C264	1-163-014-00	CERAMIC CHIP	0.0027uF	10%	50V
C265	1-163-011-11	CERAMIC CHIP	0.0015uF	10%	50V
C266	1-163-010-11	CERAMIC CHIP	0.0012uF	10%	50V
C267	1-163-137-00	CERAMIC CHIP	680PF	5%	50V
C268	1-126-163-11	ELECT	4.7uF	20%	50V
C269	1-163-117-00	CERAMIC CHIP	100PF	5%	50V
C270	1-126-163-11	ELECT	4.7uF	20%	50V
C271	1-126-163-11	ELECT	4.7uF	20%	50V
C272	1-163-005-11	CERAMIC CHIP	470PF	10%	50V
C273	1-126-163-11	ELECT	4.7uF	20%	50V
C274	1-163-833-00	CERAMIC CHIP	0.068uF		25V
C275	1-126-163-11	ELECT	4.7uF	20%	50V
C276	1-163-833-00	CERAMIC CHIP	0.068uF		25V
C278	1-126-967-11	ELECT	47uF	20%	50V
C279	1-126-967-11	ELECT	47uF	20%	50V
C280	1-126-948-11	ELECT	100uF	20%	35V
C281	1-164-232-11	CERAMIC CHIP	0.01uF		50V
C282	1-126-948-11	ELECT	100uF	20%	35V
C285	1-126-937-11	ELECT	4700uF	20%	16V
C286	1-126-943-11	ELECT	2200uF	20%	25V
C287	1-126-301-11	ELECT	1uF	20%	50V
C288	1-126-096-11	ELECT	10uF	20%	35V
C289	1-124-589-11	ELECT	47uF	20%	16V
C290	1-124-477-11	ELECT	47uF	20%	25V
C291	1-124-589-11	ELECT	47uF	20%	16V
C292	1-124-589-11	ELECT	47uF	20%	16V
C295	1-126-096-11	ELECT	10uF	20%	35V
C296	1-126-096-11	ELECT	10uF	20%	35V
C297	1-126-096-11	ELECT	10uF	20%	35V
C301	1-126-925-11	ELECT	470uF	20%	10V
C302	1-126-925-11	ELECT	470uF	20%	10V
C303	1-163-009-11	CERAMIC CHIP	0.001uF	10%	50V
C306	1-163-095-00	CERAMIC CHIP	12PF	5%	50V
C307	1-163-095-00	CERAMIC CHIP	12PF	5%	50V
C311	1-163-038-00	CERAMIC CHIP	0.1uF		25V
C312	1-126-157-11	ELECT	10uF	20%	16V
C313	1-164-232-11	CERAMIC CHIP	0.01uF		50V
C314	1-125-486-11	DUBLE LAYERS	0.22F		5.5V
C315	1-164-346-11	CERAMIC CHIP	1uF		16V
C341	1-164-005-11	CERAMIC CHIP	0.47uF		25V
C342	1-164-005-11	CERAMIC CHIP	0.47uF		25V
C361	1-163-009-11	CERAMIC CHIP	0.001uF	10%	50V
C362	1-163-038-00	CERAMIC CHIP	0.1uF		25V
C363	1-163-009-11	CERAMIC CHIP	0.001uF	10%	50V
C364	1-163-117-00	CERAMIC CHIP	100PF	5%	50V
C365	1-163-109-00	CERAMIC CHIP	47PF	5%	50V
C366	1-163-038-00	CERAMIC CHIP	0.1uF		25V
C367	1-163-038-00	CERAMIC CHIP	0.1uF		25V
C368	1-164-346-11	CERAMIC CHIP	1uF		16V
C369	1-126-933-11	ELECT	100uF	20%	16V
C370	1-163-018-00	CERAMIC CHIP	0.0056uF	5%	50V
C371	1-163-038-00	CERAMIC CHIP	0.1uF		25V
C372	1-163-009-11	CERAMIC CHIP	0.001uF	10%	50V
C373	1-163-117-00	CERAMIC CHIP	100PF	5%	50V
C374	1-164-232-11	CERAMIC CHIP	0.01uF		50V
C381	1-163-038-00	CERAMIC CHIP	0.1uF		25V

MAIN PANEL JACK PIN JACK VR

Ref. No.	Part No.	Description			Remark
C382	1-163-009-11	CERAMIC CHIP	0.001uF	10%	50V
C383	1-163-117-00	CERAMIC CHIP	100PF	5%	50V
C384	1-164-232-11	CERAMIC CHIP	0.01uF		50V
C391	1-126-157-11	ELECT	10uF	20%	16V
C392	1-163-038-00	CERAMIC CHIP	0.1uF		25V
C395	1-126-157-11	ELECT	10uF	20%	16V
C396	1-163-038-00	CERAMIC CHIP	0.1uF		25V
C1101	1-163-117-11	CERAMIC CHIP	100PF	5%	50V (G, IT)
C1151	1-163-117-11	CERAMIC CHIP	100PF	5%	50V (G, IT)
C2201	1-164-346-11	CERAMIC CHIP	1uF		16V
C2202	1-164-346-11	CERAMIC CHIP	1uF		16V
C2203	1-164-505-11	CERAMIC CHIP	2.2uF		16V
C2204	1-164-505-11	CERAMIC CHIP	2.2uF		16V
C2205	1-164-346-11	CERAMIC CHIP	1uF		16V
C2206	1-163-133-00	CERAMIC CHIP	470PF	5%	50V
C2208	1-126-926-11	ELECT	1000uF	20%	10V
C2209	1-163-117-00	CERAMIC CHIP	100PF	5%	50V
C2210	1-163-125-00	CERAMIC CHIP	220PF	5%	50V
C2211	1-126-923-11	ELECT	220uF	20%	10V
C2212	1-163-038-00	CERAMIC CHIP	0.1uF		25V
C2216	1-163-117-00	CERAMIC CHIP	100PF	5%	50V
C2217	1-163-117-00	CERAMIC CHIP	100PF	5%	50V
C2218	1-164-346-11	CERAMIC CHIP	1uF		16V
C2219	1-164-346-11	CERAMIC CHIP	1uF		16V
C2220	1-163-036-00	CERAMIC CHIP	0.068uF		50V
C2221	1-124-907-11	ELECT	10uF	20%	50V
C2222	1-163-009-11	CERAMIC CHIP	0.001uF	10%	50V (G, IT)
C2223	1-163-009-11	CERAMIC CHIP	0.001uF	10%	50V (G, IT)
C2251	1-164-346-11	CERAMIC CHIP	1uF		16V
C2252	1-164-346-11	CERAMIC CHIP	1uF		16V
C2253	1-164-505-11	CERAMIC CHIP	2.2uF		16V
C2254	1-164-505-11	CERAMIC CHIP	2.2uF		16V
C2256	1-163-133-00	CERAMIC CHIP	470PF	5%	50V
C2259	1-163-117-00	CERAMIC CHIP	100PF	5%	50V
C2260	1-163-125-00	CERAMIC CHIP	220PF	5%	50V
C2271	1-164-232-11	CERAMIC CHIP	0.01uF		50V
C2272	1-163-038-00	CERAMIC CHIP	0.1uF		25V
C2273	1-163-038-00	CERAMIC CHIP	0.1uF		25V
C2274	1-163-038-00	CERAMIC CHIP	0.1uF		25V
C2275	1-163-038-00	CERAMIC CHIP	0.1uF		25V
C2276	1-163-117-00	CERAMIC CHIP	100PF	5%	50V
C2277	1-163-117-00	CERAMIC CHIP	100PF	5%	50V
C2278	1-163-117-00	CERAMIC CHIP	100PF	5%	50V
C2279	1-163-038-00	CERAMIC CHIP	0.1uF		25V
C2280	1-163-038-00	CERAMIC CHIP	0.1uF		25V
C2285	1-164-232-11	CERAMIC CHIP	0.01uF		50V
C2286	1-164-232-11	CERAMIC CHIP	0.01uF		50V
C2288	1-164-232-11	CERAMIC CHIP	0.01uF		50V
C2289	1-163-038-00	CERAMIC CHIP	0.1uF		25V
C2290	1-164-005-11	CERAMIC CHIP	0.47uF		25V
C2291	1-126-947-91	ELECT	47uF	20%	35V
C2371	1-164-232-11	CERAMIC CHIP	0.01uF		50V
C2372	1-164-232-11	CERAMIC CHIP	0.01uF		50V
C3301	1-164-232-11	CERAMIC CHIP	0.01uF		50V
C3302	1-164-232-11	CERAMIC CHIP	0.01uF		50V
C3303	1-164-232-11	CERAMIC CHIP	0.01uF		50V
C3304	1-164-232-11	CERAMIC CHIP	0.01uF		50V
C3305	1-126-933-11	ELECT	100uF	20%	16V
C3306	1-164-232-11	CERAMIC CHIP	0.01uF		50V
C3371	1-126-933-11	ELECT	100uF	20%	16V
C3372	1-164-505-11	CERAMIC CHIP	2.2uF		16V
C3376	1-164-232-11	CERAMIC CHIP	0.01uF		50V
C3381	1-126-933-11	ELECT	100uF	20%	16V
C3382	1-164-505-11	CERAMIC CHIP	2.2uF		16V

< CONNECTOR >

CN1	* 1-573-107-11	CONNECTOR, PC BOARD (PLUG)
CN2	* 1-573-107-11	CONNECTOR, PC BOARD (PLUG)
CN4	* 1-573-107-11	CONNECTOR, PC BOARD (PLUG)
CN5	* 1-573-107-11	CONNECTOR, PC BOARD (PLUG)
CN7	* 1-573-107-11	CONNECTOR, PC BOARD (PLUG)
CN101	* 1-566-859-11	SOCKET, CONNECTOR 15P (SYSTEM CONTROL)
CN102	* 1-565-971-11	SOCKET, CONNECTOR(PC BOARD) 9P
CN103	* 1-565-968-11	PIN, CONNECTOR (PC BOARD) 9P
CN201	* 1-573-084-11	CONNECTOR, FPC (NON ZIF) 20P
CN202	* 1-573-084-11	CONNECTOR, FPC (NON ZIF) 20P
CN203	* 1-573-085-11	CONNECTOR, FPC (NON ZIF) 19P
CN204	* 1-564-706-11	PIN, CONNECTOR (SMALL TYPE) 4P
CN205	* 1-564-714-11	PIN, CONNECTOR (SMALL TYPE) 12P
CN301	* 1-573-084-11	CONNECTOR, FPC (NON ZIF) 20P
CN302	* 1-573-084-11	CONNECTOR, FPC (NON ZIF) 20P
CN351	* 1-561-651-00	SOCKET, CONNECTOR 7P
CN352	1-569-132-11	PIN, CONNECTOR 7P
CN353	1-573-712-11	CONNECTOR, BOARD TO BOARD 8P
CN361	1-562-088-00	SOCKET, CONNECTOR 9P
CN362	1-560-943-00	PIN, CONNECTOR 9P

< DIODE >

D1	8-719-988-62	DIODE 1SS355 (NEW TYPE)
D2	8-719-988-62	DIODE 1SS355 (NEW TYPE)
D3	8-719-988-62	DIODE 1SS355 (NEW TYPE)
D201	8-719-988-62	DIODE 1SS355
D202	8-719-988-62	DIODE 1SS355
D203	8-719-988-62	DIODE 1SS355

MAIN | PANEL | JACK | PIN JACK | VR

Ref. No.	Part No.	Description	Remark
D205	8-719-976-96	DIODE DTZ4.7C	
D281	8-719-210-33	DIODE EC10DS2	
D282	8-719-210-33	DIODE EC10DS2	
D283	8-719-977-81	DIODE DTZ33B	
D284	8-719-988-62	DIODE 1SS355	
D286	8-719-210-33	DIODE EC10DS2	
D287	8-719-210-33	DIODE EC10DS2	
D288	8-719-210-39	DIODE EC10QS-04	
D289	8-719-210-39	DIODE EC10QS-04	
D290	8-719-977-36	DIODE DTZ12B	
D291	8-719-988-62	DIODE 1SS355	
D292	8-719-977-07	DIODE DTZ6.2B	
D293	8-719-988-62	DIODE 1SS355	
D294	8-719-988-62	DIODE 1SS355	
D301	8-719-977-03	DIODE DTZ5.6B	
D302	8-719-977-03	DIODE DTZ5.6B	
D311	8-719-988-62	DIODE 1SS355	
D312	8-719-988-62	DIODE 1SS355	
D313	8-719-988-62	DIODE 1SS355	
D314	8-719-988-62	DIODE 1SS355	
D316	8-719-301-39	DIODE SEL2210S	
D317	8-719-301-39	DIODE SEL2210S	
D318	8-719-301-39	DIODE SEL2210S	
D319	8-719-301-39	DIODE SEL2210S	
D320	8-719-301-39	DIODE SEL2210S	
D321	8-719-301-39	DIODE SEL2210S	
D322	8-719-301-39	DIODE SEL2210S	
D323	8-719-301-39	DIODE SEL2210S	
D324	8-719-988-62	DIODE 1SS355	
D325	8-719-988-62	DIODE 1SS355	
D326	8-719-988-62	DIODE 1SS355	
D327	8-719-988-62	DIODE 1SS355	
D328	8-719-988-62	DIODE 1SS355	
D329	8-719-988-62	DIODE 1SS355	
D330	8-719-988-62	DIODE 1SS355	
D331	8-719-988-62	DIODE 1SS355	
D391	8-719-988-62	DIODE 1SS355	

< FILTER >

FL301	1-519-637-11	INDICATOR TUBE, FLUORESCENT

< IC >

IC1	8-759-821-93	IC LA5601 (NEW TYPE)
IC101	8-759-981-95	IC RC4558S
IC201	8-759-516-41	IC CD4052BCM
IC202	8-759-516-41	IC CD4052BCM
IC203	8-759-981-95	IC RC4558S
IC204	8-759-516-47	IC CD4066BCM
IC205	8-759-636-57	IC CXA1492Q
IC206	8-759-981-95	IC RC4558S
IC207	8-759-823-46	IC LA5603
IC301	8-759-991-11	IC XR1091DCP
IC302	8-759-516-41	IC CD4052BCM
IC303	8-759-140-57	IC uPD4990AG
IC304	8-759-500-31	IC X24C01P
IC305	8-759-154-53	IC uPD78134GF-032-3B9
IC306	8-759-512-44	IC SN755703
IC307	8-759-512-44	IC SN755703
IC308	8-749-922-36	IC GP1U50XB
IC309	8-759-927-29	IC SN74HCU04ANS
IC361	8-759-981-95	IC RC4558S
IC362	8-759-636-55	IC M5218AFP
IC395	8-759-820-62	IC LB1639

< JACK >

J101	1-565-320-11	JACK, PIN 6P (VIDEO/AUX, DAT)
J361	1-562-837-21	JACK (MIX MIC)
J362	1-562-837-21	JACK (HEADPHONES)

< CHIP JUMPER >

JW201	1-216-295-00	METAL CHIP	0	5%	1/10W
JW202	1-216-295-00	METAL CHIP	0	5%	1/10W
JW203	1-216-295-00	METAL CHIP	0	5%	1/10W
JW204	1-216-295-00	METAL CHIP	0	5%	1/10W
JW209	1-216-295-00	METAL CHIP	0	5%	1/10W
JW210	1-216-295-00	METAL CHIP	0	5%	1/10W
JW212	1-216-295-00	METAL CHIP	0	5%	1/10W
JW282	1-216-296-00	METAL CHIP	0	5%	1/8W
JW284	1-216-296-00	METAL CHIP	0	5%	1/8W
JW285	1-216-296-00	METAL CHIP	0	5%	1/8W
JW286	1-216-296-00	METAL CHIP	0	5%	1/8W
JW287	1-216-296-00	METAL CHIP	0	5%	1/8W
JW304	1-216-296-00	METAL CHIP	0	5%	1/8W
JW305	1-216-296-00	METAL CHIP	0	5%	1/8W
JW306	1-216-296-00	METAL CHIP	0	5%	1/8W
JW351	1-216-295-00	METAL CHIP	0	5%	1/10W
JW352	1-216-295-00	METAL CHIP	0	5%	1/10W
JW353	1-216-295-00	METAL CHIP	0	5%	1/10W
JW354	1-216-295-00	METAL CHIP	0	5%	1/10W
JW355	1-216-295-00	METAL CHIP	0	5%	1/10W
JW357	1-216-295-00	METAL CHIP	0	5%	1/10W

< COIL >

L2201	1-410-393-11	INDUCTOR, CHIP	100uH
L2202	1-408-789-21	INDUCTOR, CHIP	100uH
L2203	1-410-393-11	INDUCTOR, CHIP	100uH

MAIN PANEL JACK PIN JACK VR

Ref. No.	Part No.	Description	Remark
		< TRANSISTOR >	
Q1	8-729-602-36	TRANSISTOR 2SA1602	(NEW TYPE)
Q2	8-729-602-21	TRANSISTOR 2SC4154-F	(NEW TYPE)
Q3	8-729-810-19	TRANSISTOR 2SC4396	(NEW TYPE)
Q4	8-729-810-19	TRANSISTOR 2SC4396	(NEW TYPE)
Q201	8-729-602-21	TRANSISTOR 2SC4154-F	
Q202	8-729-602-21	TRANSISTOR 2SC4154-F	
Q203	8-729-602-21	TRANSISTOR 2SC4154-F	
Q204	8-729-602-21	TRANSISTOR 2SC4154-F	
Q205	8-729-602-21	TRANSISTOR 2SC4154-F	
Q206	8-729-602-21	TRANSISTOR 2SC4154-F	
Q281	8-729-209-15	TRANSISTOR 2SD2012	
Q283	8-729-209-15	TRANSISTOR 2SD2012	
Q284	8-729-810-28	TRANSISTOR 2SC4398	
Q286	8-729-810-16	TRANSISTOR 2SA1678	
Q287	8-729-810-28	TRANSISTOR 2SC4398	
Q289	8-729-602-21	TRANSISTOR 2SC4154-F	
Q290	8-729-808-01	TRANSISTOR 2SD1622-S	
Q311	8-729-602-21	TRANSISTOR 2SC4154-F	
Q312	8-729-602-21	TRANSISTOR 2SC4154-F	
Q313	8-729-602-21	TRANSISTOR 2SC4154-F	
Q314	8-729-810-28	TRANSISTOR 2SC4398	
		< RESISTOR >	
R1	1-216-057-00	METAL CHIP 2.2K 5% 1/10W	(NEW TYPE)
R2	1-216-009-00	METAL CHIP 22 5% 1/10W	(NEW TYPE)
R3	1-216-057-00	METAL CHIP 2.2K 5% 1/10W	(NEW TYPE)
R4	1-216-081-00	METAL CHIP 22K 5% 1/10W	(NEW TYPE)
R5	1-216-073-00	METAL CHIP 10K 5% 1/10W	(NEW TYPE)
R101	1-216-049-00	METAL CHIP 1K 5% 1/10W	
R102	1-216-089-00	METAL CHIP 47K 5% 1/10W	
R103	1-216-049-00	METAL CHIP 1K 5% 1/10W	
R104	1-216-115-00	METAL CHIP 560K 5% 1/10W	
R105	1-216-089-00	METAL CHIP 47K 5% 1/10W	
R106	1-216-049-00	METAL CHIP 1K 5% 1/10W	
R107	1-216-089-00	METAL CHIP 47K 5% 1/10W	
R108	1-216-037-00	METAL CHIP 330 5% 1/10W	
R109	1-216-073-00	METAL CHIP 10K 5% 1/10W	
R110	1-216-295-00	METAL CHIP 0 5% 1/10W	
R151	1-216-049-00	METAL CHIP 1K 5% 1/10W	
R152	1-216-089-00	METAL CHIP 47K 5% 1/10W	
R153	1-216-049-00	METAL CHIP 1K 5% 1/10W	
R154	1-216-115-00	METAL CHIP 560K 5% 1/10W	
R155	1-216-089-00	METAL CHIP 47K 5% 1/10W	
R156	1-216-049-00	METAL CHIP 1K 5% 1/10W	
R157	1-216-089-00	METAL CHIP 47K 5% 1/10W	
R158	1-216-037-00	METAL CHIP 330 5% 1/10W	
R159	1-216-073-00	METAL CHIP 10K 5% 1/10W	
R160	1-216-295-00	METAL CHIP 0 5% 1/10W	
R181	1-216-121-00	METAL CHIP 1M 5% 1/10W	
R182	1-216-121-00	METAL CHIP 1M 5% 1/10W	
R183	1-216-121-00	METAL CHIP 1M 5% 1/10W	
R184	1-216-121-00	METAL CHIP 1M 5% 1/10W	
R185	1-216-121-00	METAL CHIP 1M 5% 1/10W	
R186	1-216-121-00	METAL CHIP 1M 5% 1/10W	
R187	1-216-121-00	METAL CHIP 1M 5% 1/10W	
R188	1-216-073-00	METAL CHIP 10K 5% 1/10W	
R189	1-216-073-00	METAL CHIP 10K 5% 1/10W	
R190	1-216-049-00	METAL CHIP 1K 5% 1/10W	
R191	1-216-121-00	METAL CHIP 1M 5% 1/10W	
R192	1-216-121-00	METAL CHIP 1M 5% 1/10W	
R193	1-216-121-00	METAL CHIP 1M 5% 1/10W	
R194	1-216-121-00	METAL CHIP 1M 5% 1/10W	
R195	1-216-121-00	METAL CHIP 1M 5% 1/10W	
R196	1-216-121-00	METAL CHIP 1M 5% 1/10W	
R197	1-216-121-00	METAL CHIP 1M 5% 1/10W	
R198	1-216-049-00	METAL CHIP 1K 5% 1/10W	
R199	1-216-057-00	METAL CHIP 2.2K 5% 1/10W	
R201	1-216-049-00	METAL CHIP 1K 5% 1/10W	
R202	1-216-049-00	METAL CHIP 1K 5% 1/10W	
R203	1-216-049-00	METAL CHIP 1K 5% 1/10W	
R205	1-216-089-00	METAL CHIP 47K 5% 1/10W	
R207	1-216-089-00	METAL CHIP 47K 5% 1/10W	
R208	1-216-089-00	METAL CHIP 47K 5% 1/10W	
R209	1-216-089-00	METAL CHIP 47K 5% 1/10W	
R210	1-216-073-00	METAL CHIP 10K 5% 1/10W	
R211	1-216-073-00	METAL CHIP 10K 5% 1/10W	
R212	1-216-073-00	METAL CHIP 10K 5% 1/10W	
R213	1-216-073-00	METAL CHIP 10K 5% 1/10W	
R214	1-216-073-00	METAL CHIP 10K 5% 1/10W	
R215	1-216-049-00	METAL CHIP 1K 5% 1/10W	
R216	1-216-089-00	METAL CHIP 47K 5% 1/10W	
R217	1-216-025-00	METAL CHIP 100 5% 1/10W	
R218	1-216-121-00	METAL CHIP 1M 5% 1/10W	
R219	1-216-083-00	METAL CHIP 27K 5% 1/10W	
R220	1-216-053-00	METAL CHIP 1.5K 5% 1/10W	
R221	1-216-121-00	METAL CHIP 1M 5% 1/10W	
R222	1-216-073-00	METAL CHIP 10K 5% 1/10W	
R223	1-216-025-00	METAL CHIP 100 5% 1/10W	
R224	1-216-057-00	METAL CHIP 2.2K 5% 1/10W	
R251	1-216-049-00	METAL CHIP 1K 5% 1/10W	
R252	1-216-049-00	METAL CHIP 1K 5% 1/10W	
R253	1-216-049-00	METAL CHIP 1K 5% 1/10W	
R255	1-216-089-00	METAL CHIP 47K 5% 1/10W	
R257	1-216-089-00	METAL CHIP 47K 5% 1/10W	
R258	1-216-089-00	METAL CHIP 47K 5% 1/10W	
R259	1-216-089-00	METAL CHIP 47K 5% 1/10W	

MAIN PANEL JACK PIN JACK VR

Ref. No.	Part No.	Description			Remark
R260	1-216-073-00	METAL CHIP	10K	5%	1/10W
R261	1-216-073-00	METAL CHIP	10K	5%	1/10W
R262	1-216-073-00	METAL CHIP	10K	5%	1/10W
R263	1-216-073-00	METAL CHIP	10K	5%	1/10W
R264	1-216-073-00	METAL CHIP	10K	5%	1/10W
R265	1-216-049-00	METAL CHIP	1K	5%	1/10W
R266	1-216-089-00	METAL CHIP	47K	5%	1/10W
R267	1-216-025-00	METAL CHIP	100	5%	1/10W
R268	1-216-121-00	METAL CHIP	1M	5%	1/10W
R269	1-216-083-00	METAL CHIP	27K	5%	1/10W
R270	1-216-053-00	METAL CHIP	1.5K	5%	1/10W
R271	1-216-121-00	METAL CHIP	1M	5%	1/10W
R272	1-216-073-00	METAL CHIP	10K	5%	1/10W
R273	1-216-025-00	METAL CHIP	100	5%	1/10W
R274	1-216-057-00	METAL CHIP	2.2K	5%	1/10W
R275	1-216-073-00	METAL CHIP	10K	5%	1/10W
R276	1-216-073-00	METAL CHIP	10K	5%	1/10W (FORMER TYPE)
R277	1-216-049-00	METAL CHIP	1K	5%	1/10W
R281	1-216-049-00	METAL CHIP	1K	5%	1/10W
R282	1-216-049-00	METAL CHIP	1K	5%	1/10W
R283	1-216-049-00	METAL CHIP	1K	5%	1/10W
R284	1-216-049-00	METAL CHIP	1K	5%	1/10W
R285	1-216-001-00	METAL CHIP	10	5%	1/10W
R286	1-216-079-00	METAL CHIP	18K	5%	1/10W
R287	1-216-061-00	METAL CHIP	3.3K	5%	1/10W
R291	1-216-061-00	METAL CHIP	3.3K	5%	1/10W
R292	1-216-049-00	METAL CHIP	1K	5%	1/10W
R293	1-216-049-00	METAL CHIP	1K	5%	1/10W
R294	1-216-049-00	METAL CHIP	1K	5%	1/10W
R295	1-216-061-00	METAL CHIP	3.3K	5%	1/10W
R298	1-216-025-00	METAL CHIP	100	5%	1/10W
R299	1-216-049-00	METAL CHIP	1K	5%	1/10W
R300	1-216-077-00	METAL CHIP	15K	5%	1/10W
R301	1-216-017-00	METAL CHIP	47	5%	1/10W
R302	1-216-017-00	METAL CHIP	47	5%	1/10W
R303	1-216-073-00	METAL CHIP	10K	5%	1/10W
R304	1-216-073-00	METAL CHIP	10K	5%	1/10W
R305	1-216-053-00	METAL CHIP	1.5K	5%	1/10W
R306	1-216-049-00	METAL CHIP	1K	5%	1/10W
R307	1-216-073-00	METAL CHIP	10K	5%	1/10W
R308	1-216-073-00	METAL CHIP	10K	5%	1/10W
R309	1-216-073-00	METAL CHIP	10K	5%	1/10W
R312	1-216-073-00	METAL CHIP	10K	5%	1/10W (AEP, UK)
R313	1-216-097-00	METAL CHIP	100K	5%	1/10W
R314	1-216-073-00	METAL CHIP	10K	5%	1/10W (G, IT)
R315	1-216-097-00	METAL CHIP	100K	5%	1/10W
R316	1-216-073-00	METAL CHIP	10K	5%	1/10W
R317	1-216-097-00	METAL CHIP	100K	5%	1/10W
R318	1-216-073-00	METAL CHIP	10K	5%	1/10W
R319	1-216-065-00	METAL CHIP	4.7K	5%	1/10W
R320	1-216-073-00	METAL CHIP	10K	5%	1/10W
R321	1-216-061-00	METAL CHIP	3.3K	5%	1/10W
R322	1-216-041-00	METAL CHIP	470	5%	1/10W
R323	1-216-045-00	METAL CHIP	680	5%	1/10W
R324	1-216-049-00	METAL CHIP	1K	5%	1/10W
R325	1-216-053-00	METAL CHIP	1.5K	5%	1/10W
R326	1-216-057-00	METAL CHIP	2.2K	5%	1/10W
R327	1-216-061-00	METAL CHIP	3.3K	5%	1/10W
R328	1-216-041-00	METAL CHIP	470	5%	1/10W
R329	1-216-045-00	METAL CHIP	680	5%	1/10W
R330	1-216-049-00	METAL CHIP	1K	5%	1/10W
R331	1-216-053-00	METAL CHIP	1.5K	5%	1/10W
R332	1-216-057-00	METAL CHIP	2.2K	5%	1/10W
R333	1-216-061-00	METAL CHIP	3.3K	5%	1/10W
R334	1-216-041-00	METAL CHIP	470	5%	1/10W
R335	1-216-045-00	METAL CHIP	680	5%	1/10W
R336	1-216-049-00	METAL CHIP	1K	5%	1/10W
R337	1-216-053-00	METAL CHIP	1.5K	5%	1/10W
R338	1-216-057-00	METAL CHIP	2.2K	5%	1/10W
R340	1-216-061-00	METAL CHIP	3.3K	5%	1/10W
R341	1-216-041-00	METAL CHIP	470	5%	1/10W
R342	1-216-045-00	METAL CHIP	680	5%	1/10W
R343	1-216-049-00	METAL CHIP	1K	5%	1/10W
R344	1-216-053-00	METAL CHIP	1.5K	5%	1/10W
R345	1-216-057-00	METAL CHIP	2.2K	5%	1/10W
R346	1-216-065-00	METAL CHIP	4.7K	5%	1/10W
R347	1-216-097-00	METAL CHIP	100K	5%	1/10W
R348	1-216-097-00	METAL CHIP	100K	5%	1/10W
R349	1-216-097-00	METAL CHIP	100K	5%	1/10W
R350	1-216-049-00	METAL CHIP	1K	5%	1/10W
R351	1-216-049-00	METAL CHIP	1K	5%	1/10W
R352	1-216-037-00	METAL CHIP	330	5%	1/10W
R353	1-216-037-00	METAL CHIP	330	5%	1/10W
R354	1-216-029-00	METAL CHIP	150	5%	1/10W
R355	1-216-037-00	METAL CHIP	330	5%	1/10W
R356	1-216-089-00	METAL CHIP	47K	5%	1/10W
R357	1-216-073-00	METAL CHIP	10K	5%	1/10W
R358	1-216-073-00	METAL CHIP	10K	5%	1/10W
R360	1-216-073-00	METAL CHIP	10K	5%	1/10W
R361	1-216-073-00	METAL CHIP	10K	5%	1/10W
R362	1-216-037-00	METAL CHIP	330	5%	1/10W
R363	1-216-031-00	METAL CHIP	180	5%	1/10W
R364	1-216-097-00	METAL CHIP	100K	5%	1/10W
R365	1-216-081-00	METAL CHIP	22K	5%	1/10W
R366	1-216-089-00	METAL CHIP	47K	5%	1/10W
R367	1-216-089-00	METAL CHIP	47K	5%	1/10W

MAIN | PANEL | JACK | PIN JACK | VR | POWER

Ref. No.	Part No.	Description			Remark
R368	1-216-081-00	METAL CHIP	22K	5%	1/10W
R369	1-216-049-00	METAL CHIP	1K	5%	1/10W
R370	1-216-049-00	METAL CHIP	1K	5%	1/10W
R371	1-216-049-00	METAL CHIP	1K	5%	1/10W
R372	1-216-065-00	METAL CHIP	4.7K	5%	1/10W
R373	1-216-065-00	METAL CHIP	4.7K	5%	1/10W
R374	1-216-079-00	METAL CHIP	18K	5%	1/10W
R375	1-216-017-00	METAL CHIP	47	5%	1/10W
R376	1-216-073-00	METAL CHIP	10K	5%	1/10W
R381	1-216-049-00	METAL CHIP	1K	5%	1/10W
R382	1-216-065-00	METAL CHIP	4.7K	5%	1/10W
R383	1-216-065-00	METAL CHIP	4.7K	5%	1/10W
R384	1-216-079-00	METAL CHIP	18K	5%	1/10W
R385	1-216-017-00	METAL CHIP	47	5%	1/10W
R386	1-216-073-00	METAL CHIP	10K	5%	1/10W
R391	1-216-073-00	METAL CHIP	10K	5%	1/10W
R392	1-216-097-00	METAL CHIP	100K	5%	1/10W
R393	1-216-121-00	METAL CHIP	1M	5%	1/10W
R395	1-216-035-00	METAL CHIP	270	5%	1/10W
R396	1-216-065-00	METAL CHIP	4.7K	5%	1/10W
R397	1-216-037-00	METAL CHIP	330	5%	1/10W
R1001	1-216-049-00	METAL CHIP	1K	5%	1/10W
R1051	1-216-049-00	METAL CHIP	1K	5%	1/10W
R2201	1-216-073-00	METAL CHIP	10K	5%	1/10W
R2202	1-216-065-00	METAL CHIP	4.7K	5%	1/10W
R2203	1-216-065-00	METAL CHIP	4.7K	5%	1/10W
R2204	1-216-115-00	METAL CHIP	560K	5%	1/10W
R2205	1-216-049-00	METAL CHIP	1K	5%	1/10W
R2206	1-216-037-00	METAL CHIP	330	5%	1/10W
R2251	1-216-073-00	METAL CHIP	10K	5%	1/10W
R2252	1-216-065-00	METAL CHIP	4.7K	5%	1/10W
R2253	1-216-065-00	METAL CHIP	4.7K	5%	1/10W
R2254	1-216-115-00	METAL CHIP	560K	5%	1/10W
R2255	1-216-049-00	METAL CHIP	1K	5%	1/10W
R2256	1-216-057-00	METAL CHIP	2.2K	5%	1/10W
R3307	1-216-049-00	METAL CHIP	1K	5%	1/10W
R3308	1-216-049-00	METAL CHIP	1K	5%	1/10W
R3310	1-216-049-00	METAL CHIP	1K	5%	1/10W
R3371	1-216-025-00	METAL CHIP	100	5%	1/10W
R3381	1-216-025-00	METAL CHIP	100	5%	1/10W

< VARIABLE RESISTOR >

RV361	1-241-140-11	RES, VAR, CARBON 10K (MIC LEVEL)
RV395	1-241-418-11	RES, VAR, CARBON 10K (VOLUME)

< SWITCH >

S311	1-572-184-11	SWITCH, KEYBOARD (FUNCTION)
S312	1-572-184-11	SWITCH, KEYBOARD (RESET)
S313	1-572-184-11	SWITCH, KEYBOARD (EQ ON/OFF)
S314	1-572-184-11	SWITCH, KEYBOARD (SURROUND)
S315	1-572-184-11	SWITCH, KEYBOARD (DBFB)
S316	1-572-184-11	SWITCH, KEYBOARD (WAKE UP)
S317	1-572-184-11	SWITCH, KEYBOARD (OPEN/CLOSE)
S318	1-572-184-11	SWITCH, KEYBOARD (■)
S319	1-572-184-11	SWITCH, KEYBOARD (▷ ❚❚)
S320	1-572-184-11	SWITCH, KEYBOARD (▶▶ ▷▷|)
S321	1-572-184-11	SWITCH, KEYBOARD (|◁◁ ◀◀)
S322	1-572-184-11	SWITCH, KEYBOARD (EDIT/TIME FADE)
S323	1-572-184-11	SWITCH, KEYBOARD (NEXT/MEMORY)
S324	1-572-184-11	SWITCH, KEYBOARD (TIMER SET)
S325	1-572-184-11	SWITCH, KEYBOARD (CONTINUE)
S326	1-572-184-11	SWITCH, KEYBOARD (SHUFFLE)
S327	1-572-184-11	SWITCH, KEYBOARD (PROGRAM)
S328	1-572-184-11	SWITCH, KEYBOARD (CHECK)
S329	1-572-184-11	SWITCH, KEYBOARD (SYSTEM POWER ON/OFF)
S330	1-572-184-11	SWITCH, KEYBOARD (RESET/TUNING)
S331	1-572-184-11	SWITCH, KEYBOARD (+)
S332	1-572-184-11	SWITCH, KEYBOARD (BAND)
S333	1-572-184-11	SWITCH, KEYBOARD (-)
S334	1-572-184-11	SWITCH, KEYBOARD (CLOCK SET)
S335	1-572-184-11	SWITCH, KEYBOARD (TIMER SET)
S336	1-572-184-11	SWITCH, KEYBOARD (RESET)

< TERMINAL BOARD >

TB101	* 1-537-138-31	TERMINAL BOARD (ANT)

< CLAMP >

TP105	* 3-683-631-01	CLAMP

< CRYSTAL >

X301	1-527-997-21	VIBRATOR, CRYSTAL
X302	Y 1-577-364-11	VIBRATOR, CERAMIC 12MHz

****

* A-4341-652-A POWER BOARD, COMPLETE (AEP,IT)
* A-4341-661-A POWER BOARD, COMPLETE (G)
* A-4341-653-A POWER BOARD, COMPLETE (UK)

****

* 1-533-213-31 HOLDER, FUSE

< CAPACITOR >

C801	1-124-907-11	ELECT	10uF	20%	50V
C802	1-162-294-31	CERAMIC	0.001uF	10%	50V (AEP, UK)
C803	1-126-233-11	ELECT	22uF	20%	50V

POWER

Ref. No.	Part No.	Description			Remark
C804	1-164-159-11	CERAMIC	0.1uF		50V
C805	1-164-159-11	CERAMIC	0.1uF		50V
C806	1-102-114-00	CERAMIC	470PF	10%	50V (G, IT)
C807	1-164-159-11	CERAMIC	0.1uF		50V (G, IT)
C851	1-124-907-11	ELECT	10uF	20%	50V
C852	1-162-294-31	CERAMIC	0.001uF	10%	50V (AEP, UK)
C853	1-126-233-11	ELECT	22uF	20%	50V
C854	1-164-159-11	CERAMIC	0.1uF		50V
C855	1-164-159-11	CERAMIC	0.1uF		50V
C856	1-102-114-00	CERAMIC	470PF	10%	50V (G, IT)
C857	1-164-159-11	CERAMIC	0.1uF		50V (G, IT)
C873	1-126-233-11	ELECT	22uF	20%	50V
C874	1-124-910-11	ELECT	47uF	20%	50V
C875	1-124-907-11	ELECT	10uF	20%	50V
C876	1-124-907-11	ELECT	10uF	20%	50V
C877	1-124-907-11	ELECT	10uF	20%	50V
C878	1-124-910-11	ELECT	47uF	20%	50V
C879	1-124-910-11	ELECT	47uF	20%	50V
C880	1-124-910-11	ELECT	47uF	20%	50V
C901	1-124-618-11	ELECT	2200uF	20%	35V
C902	1-124-618-11	ELECT	2200uF	20%	35V
C903	1-136-850-11	FILM	0.1uF	10%	63V
C904	1-136-850-11	FILM	0.1uF	10%	63V
C905	1-164-159-11	CERAMIC	0.1uF		50V
C906	1-164-159-11	CERAMIC	0.1uF		50V
C8002	1-162-294-31	CERAMIC	0.001uF	10%	50V (G, IT)
C8030	1-164-159-11	CERAMIC	0.1uF		50V
C9001	1-136-850-11	FILM	0.1uF	10%	63V
C9002	1-101-004-00	CERAMIC	0.01uF	10%	50V (G, IT)
		< BREAKER >			
CB801	1-532-564-00	BREAKER, CIRCUIT 2.2A			
CB851	1-532-564-00	BREAKER, CIRCUIT 2.2A			
		< CONNECTOR >			
CN801	* 1-564-706-11	PIN, CONNECTOR (SMALL TYPE) 4P			
CN901	⚠ 1-526-931-11	INLET, AC			
		< DIODE >			
D801	8-719-912-20	DIODE 1SS120			
D909	8-719-312-09	DIODE RBA-402			

Ref. No.	Part No.	Description			Remark
		< IC >			
IC801	8-749-920-13	IC STK4132MK2			
		< IC LINK >			
ICP951	⚠ 1-532-846-21	LINK, IC			
ICP952	⚠ 1-532-846-21	LINK, IC			
		< COIL >			
L901	⚠ 1-410-397-21	FERRITE BEED INDUCTOR			(G, IT)
		< TRANSISTOR >			
Q801	8-729-900-80	TRANSISTOR DTC114ES			
		< RESISTOR >			
R801	1-249-417-11	CARBON	1K	5%	1/4W
R802	1-249-438-11	CARBON	56K	5%	1/4W
R803	1-249-418-11	CARBON	1.2K	5%	1/4W
R804	1-249-438-11	CARBON	56K	5%	1/4W
R805	1-249-389-11	CARBON	4.7	5%	1/4W
R807	1-249-389-11	CARBON	4.7	5%	1/4W (G, IT)
R851	1-249-417-11	CARBON	1K	5%	1/4W
R852	1-249-438-11	CARBON	56K	5%	1/4W
R853	1-249-418-11	CARBON	1.2K	5%	1/4W
R854	1-249-438-11	CARBON	56K	5%	1/4W
R855	1-249-389-11	CARBON	4.7	5%	1/4W
R856	1-249-417-11	CARBON	1K	5%	1/4W
R857	1-249-389-11	CARBON	4.7	5%	1/4W (G, IT)
R871	1-249-440-11	CARBON	82K	5%	1/4W
R872	1-249-437-11	CARBON	47K	5%	1/4W
R873	1-249-429-11	CARBON	10K	5%	1/4W
R874	1-247-883-00	CARBON	150K	5%	1/4W
R875	1-249-421-11	CARBON	2.2K	5%	1/4W
R876	1-249-421-11	CARBON	2.2K	5%	1/4W
R877	⚠ 1-212-881-11	FUSIBLE	100	5%	1/4W F
R878	1-249-417-11	CARBON	1K	5%	1/4W
R879	1-249-417-11	CARBON	1K	5%	1/4W
R880	⚠ 1-212-881-11	FUSIBLE	100	5%	1/4W F
R881	1-249-421-11	CARBON	2.2K	5%	1/4W
R882	1-249-421-11	CARBON	2.2K	5%	1/4W
R883	⚠ 1-212-881-11	FUSIBLE	100	5%	1/4W F
R902	⚠ 1-212-942-00	FUSIBLE	2.2	5%	1/2W F
R8001	1-249-438-11	CARBON	56K	5%	1/4W
R8501	1-249-438-11	CARBON	56K	5%	1/4W
R9001	⚠ 1-212-942-00	FUSIBLE	2.2	5%	1/2W F

Note: The components identified by mark ⚠ or dotted line with mark ⚠ are critical for safety.
Replace only with part number specified.

POWER TCB011

Ref. No.	Part No.	Description			Remark
R9002	⚠1-212-881-11	FUSIBLE 100	5%	1/4W	F

< TERMINAL BOARD >

TB801	* 1-537-240-21	TERMINAL BOARD (CHECKER PIN)	(AEP, IT, UK)
TB801	* 1-537-156-21	TERMINAL BOARD (SPEAKER)	(G)

****

* A-4303-343-A TCB011 BOARD, COMPLETE (AEP, UK)
* A-4303-344-A TCB011 BOARD, COMPLETE (G, IT)

****

< CAPACITOR >

Ref. No.	Part No.	Description			Remark
C1	1-124-120-11	ELECT	220uF	20%	25V
C2	1-164-232-11	CERAMIC CHIP	0.01uF		50V
C3	1-163-009-11	CERAMIC CHIP	0.001uF	10%	50V
C4	1-163-038-00	CERAMIC CHIP	0.1uF		25V (G, IT)
C5	1-164-232-11	CERAMIC CHIP	0.01uF		50V
C6	1-163-038-00	CERAMIC CHIP	0.1uF		25V
C7	1-163-038-00	CERAMIC CHIP	0.1uF		25V (G, IT)
C8	1-164-232-11	CERAMIC CHIP	0.01uF		50V
C9	1-163-012-00	CERAMIC CHIP	0.0018uF		50V
C10	1-163-011-11	CERAMIC CHIP	0.0015uF	10%	50V
C21	1-163-103-00	CERAMIC CHIP	27PF	5%	50V
C22	1-163-103-00	CERAMIC CHIP	27PF	5%	50V
C23	1-164-232-11	CERAMIC CHIP	0.01uF		50V
C24	1-164-232-11	CERAMIC CHIP	0.01uF		50V
C25	1-164-232-11	CERAMIC CHIP	0.01uF		50V
C26	1-164-346-11	CERAMIC CHIP	1.0uF		16V
C27	1-164-505-11	CERAMIC CHIP	2.2uF		16V
C29	1-164-232-11	CERAMIC CHIP	0.01uF		50V
C31	1-164-505-11	CERAMIC CHIP	2.2uF		16V
C32	1-164-232-11	CERAMIC CHIP	0.01uF		50V
C33	1-163-038-00	CERAMIC CHIP	0.1uF		25V
C34	1-164-005-11	CERAMIC CHIP	0.47uF		25V
C35	1-163-033-00	CERAMIC CHIP	0.022uF		50V
C36	1-163-033-00	CERAMIC CHIP	0.022uF		50V
C51	1-164-232-11	CERAMIC CHIP	0.01uF		50V
C52	1-164-505-11	CERAMIC CHIP	2.2uF		16V
C53	1-164-232-11	CERAMIC CHIP	0.01uF		50V
C54	1-164-232-11	CERAMIC CHIP	0.01uF		50V
C55	1-163-105-00	CERAMIC CHIP	33PF	5%	50V (AEP, UK)
C55	1-163-135-00	CERAMIC CHIP	560PF	5%	50V (G, IT)
C56	1-163-117-00	CERAMIC CHIP	100PF	5%	50V (G, IT)
C57	1-164-346-11	CERAMIC CHIP	1.0uF		16V
C58	1-164-346-11	CERAMIC CHIP	1.0uF		16V
C59	1-164-346-11	CERAMIC CHIP	1.0uF		16V
C60	1-163-038-00	CERAMIC CHIP	0.1uF		25V
C61	1-163-022-00	CERAMIC CHIP	0.012uF	10%	50V
C62	1-163-022-00	CERAMIC CHIP	0.012uF	10%	50V
C63	1-164-346-11	CERAMIC CHIP	1.0uF		16V
C64	1-164-346-11	CERAMIC CHIP	1.0uF		16V
C65	1-164-346-11	CERAMIC CHIP	1.0uF		16V
C66	1-164-346-11	CERAMIC CHIP	1.0uF		16V
C69	1-164-232-11	CERAMIC CHIP	0.01uF		50V
C70	1-164-232-11	CERAMIC CHIP	0.01uF		50V
C71	1-164-232-11	CERAMIC CHIP	0.01uF		50V
C72	1-124-120-11	ELECT	220uF	20%	25V
C73	1-164-505-11	CERAMIC CHIP	2.2uF		16V
C74	1-164-232-11	CERAMIC CHIP	0.01uF		50V
C75	1-126-157-11	ELECT	10uF	20%	16V
C76	1-126-101-11	ELECT	100uF	20%	16V
C79	1-126-157-11	ELECT	10uF	20%	16V
C80	1-124-472-11	ELECT	470uF	20%	10V
C81	1-164-232-11	CERAMIC CHIP	0.01uF		50V
C82	1-164-232-11	CERAMIC CHIP	0.01uF		50V
C83	1-164-232-11	CERAMIC CHIP	0.01uF		50V (G, IT)

< FILTER >

CF1	1-567-389-11	FILTER, CERAMIC
CF2	1-567-389-11	FILTER, CERAMIC (G, IT)
CF51	1-567-389-11	FILTER, CERAMIC

< CONNECTOR >

CN1	1-573-105-11	CONNECTOR, PC BOARD (RECEPTACLE)
CN2	1-573-105-11	CONNECTOR, PC BOARD (RECEPTACLE)
CN3	1-573-105-11	CONNECTOR, PC BOARD (RECEPTACLE)
CN4	1-573-105-11	CONNECTOR, PC BOARD (RECEPTACLE)
CN5	1-573-105-11	CONNECTOR, PC BOARD (RECEPTACLE)

< DIODE >

D21	8-719-977-03	DIODE	DTZ5.6B
D51	8-719-988-62	DIODE	1SS355

< FRONT END >

FE1	1-463-957-11	FRONT END (FM 4 GANG)	(G, IT)
FE1	1-465-673-11	FRONT END (2 BAND)	(AEP, UK)
FE2	1-239-030-11	ENCAPSULATED COMPONENT (MW)	
FE3	1-239-049-11	ENCAPSULATED COMPONENT (LW)	

Note: The components identified by mark ⚠ or dotted line with mark ⚠ are critical for safety.
Replace only with part number specified.

Ref. No.	Part No.	Description			Remark
		< FILTER >			
FL51	1-239-029-11	ENCAPSULATED COMPONENT			(G, IT)
		< IC >			
IC21	8-759-821-43	IC LC7218M-TP			
IC51	8-759-823-68	IC LA1851NM-TP1			
		< TRANSFORMER >			
IFT51	1-404-954-11	TRANSFORMER, DISCRIMINATOR			
IFT52	1-404-713-11	TRANSFORMER, IF			
		< CHIP JUMPER >			
JW1	1-216-295-00	METAL CHIP	0	5%	1/10W
JW2	1-216-295-00	METAL CHIP	0	5%	1/10W (AEP, UK)
JW4	1-216-295-00	METAL CHIP	0	5%	1/10W
JW5	1-216-295-00	METAL CHIP	0	5%	1/10W
JW7	1-216-295-00	METAL CHIP	0	5%	1/10W
		< COIL >			
L1	1-408-793-21	INDUCTOR, CHIP 220uH			
L51	1-408-798-00	CHIP INDUCTOR 1mH			
		< LPF >			
LPF51	1-235-221-00	FILTER, LOW PASS			
		< TRANSISTOR >			
Q1	8-729-804-72	TRANSISTOR 2SC2814-F4			
Q2	8-729-804-72	TRANSISTOR 2SC2814-F4			(G, IT)
Q3	8-729-810-16	TRANSISTOR 2SA1678			
Q4	8-729-602-36	TRANSISTOR 2SA1602			
Q5	8-729-810-28	TRANSISTOR 2SC4398			
Q6	8-729-602-36	TRANSISTOR 2SA1602			
Q7	8-729-810-28	TRANSISTOR 2SC4398			
Q21	8-729-602-21	TRANSISTOR 2SC4154-F			
Q22	8-729-232-71	TRANSISTOR 2SK208GR3			
Q23	8-729-232-59	TRANSISTOR 2SC4666B			
Q24	8-729-232-71	TRANSISTOR 2SK208GR3			
Q25	8-729-232-59	TRANSISTOR 2SC4666B			
Q51	8-729-602-21	TRANSISTOR 2SC4154-F			
Q52	8-729-602-21	TRANSISTOR 2SC4154-F			
Q53	8-729-810-28	TRANSISTOR 2SC4398			
		< RESISTOR >			
R1	1-216-037-00	METAL CHIP	330	5%	1/10W
R2	1-216-037-00	METAL CHIP	330	5%	1/10W
R3	1-216-109-00	METAL CHIP	330K	5%	1/10W
R4	1-216-037-00	METAL CHIP	330	5%	1/10W
R5	1-216-109-00	METAL CHIP	330K	5%	1/10W (G, IT)
R6	1-216-037-00	METAL CHIP	330	5%	1/10W (G, IT)
R7	1-216-025-00	METAL CHIP	100	5%	1/10W
R8	1-216-057-00	METAL CHIP	2.2K	5%	1/10W
R9	1-216-089-00	METAL CHIP	47K	5%	1/10W
R10	1-216-097-00	METAL CHIP	100K	5%	1/10W
R11	1-216-065-00	METAL CHIP	4.7K	5%	1/10W
R12	1-216-057-00	METAL CHIP	2.2K	5%	1/10W
R13	1-216-089-00	METAL CHIP	47K	5%	1/10W
R14	1-216-081-00	METAL CHIP	22K	5%	1/10W
R15	1-216-121-00	METAL CHIP	1M	5%	1/10W
R16	1-216-089-00	METAL CHIP	47K	5%	1/10W (AEP, UK)
R21	1-216-049-00	METAL CHIP	1K	5%	1/10W
R22	1-216-049-00	METAL CHIP	1K	5%	1/10W
R23	1-216-049-00	METAL CHIP	1K	5%	1/10W
R24	1-216-025-00	METAL CHIP	100	5%	1/10W
R25	1-216-065-00	METAL CHIP	4.7K	5%	1/10W
R26	1-216-049-00	METAL CHIP	1K	5%	1/10W
R27	1-216-073-00	METAL CHIP	10K	5%	1/10W
R28	1-216-073-00	METAL CHIP	10K	5%	1/10W
R29	1-216-025-00	METAL CHIP	100	5%	1/10W
R30	1-216-061-00	METAL CHIP	3.3K	5%	1/10W
R31	1-216-043-00	METAL CHIP	560	5%	1/10W
R32	1-216-049-00	METAL CHIP	1K	5%	1/10W
R33	1-216-035-00	METAL CHIP	270	5%	1/10W
R34	1-216-065-00	METAL CHIP	4.7K	5%	1/10W
R35	1-216-057-00	METAL CHIP	2.2K	5%	1/10W
R36	1-216-065-00	METAL CHIP	4.7K	5%	1/10W
R37	1-216-065-00	METAL CHIP	4.7K	5%	1/10W
R38	1-216-025-00	METAL CHIP	100	5%	1/10W
R39	1-216-061-00	METAL CHIP	3.3K	5%	1/10W
R40	1-216-043-00	METAL CHIP	560	5%	1/10W
R41	1-216-049-00	METAL CHIP	1K	5%	1/10W
R42	1-216-035-00	METAL CHIP	270	5%	1/10W
R43	1-216-081-00	METAL CHIP	22K	5%	1/10W
R44	1-216-057-00	METAL CHIP	2.2K	5%	1/10W
R45	1-216-065-00	METAL CHIP	4.7K	5%	1/10W
R46	1-216-065-00	METAL CHIP	4.7K	5%	1/10W
R51	1-216-049-00	METAL CHIP	1K	5%	1/10W
R52	1-216-081-00	METAL CHIP	22K	5%	1/10W
R53	1-216-085-00	METAL CHIP	33K	5%	1/10W
R54	1-216-071-00	METAL CHIP	8.2K	5%	1/10W

TCB011

Ref. No.	Part No.	Description			Remark
R55	1-216-075-00	METAL CHIP	12K	5%	1/10W (AEP, UK)
R56	1-216-075-00	METAL CHIP	12K	5%	1/10W (G, IT)
R57	1-216-073-00	METAL CHIP	10K	5%	1/10W
R58	1-216-066-00	METAL CHIP	5.1K	5%	1/10W
R59	1-216-065-00	METAL CHIP	4.7K	5%	1/10W
R60	1-216-065-00	METAL CHIP	4.7K	5%	1/10W
R61	1-216-115-00	METAL CHIP	560K	5%	1/10W
R62	1-216-115-00	METAL CHIP	560K	5%	1/10W
R63	1-216-049-00	METAL CHIP	1K	5%	1/10W
R64	1-216-049-00	METAL CHIP	1K	5%	1/10W
R65	1-216-073-00	METAL CHIP	10K	5%	1/10W
R66	1-216-073-00	METAL CHIP	10K	5%	1/10W
R67	1-216-057-00	METAL CHIP	2.2K	5%	1/10W
R68	1-216-057-00	METAL CHIP	2.2K	5%	1/10W
R69	1-216-025-00	METAL CHIP	100	5%	1/10W
R70	1-216-025-00	METAL CHIP	100	5%	1/10W
R71	1-216-089-00	METAL CHIP	47K	5%	1/10W
R72	1-216-073-00	METAL CHIP	10K	5%	1/10W
R73	1-216-073-00	METAL CHIP	10K	5%	1/10W
R74	1-216-013-00	METAL CHIP	33	5%	1/10W
R75	1-216-061-00	METAL CHIP	3.3K	5%	1/10W
R79	1-216-049-00	METAL CHIP	1K	5%	1/10W (AEP, UK)
R79	1-216-055-00	METAL CHIP	1.8K	5%	1/10W (G, IT)

< VARIABLE RESISTOR >

RV51	1-238-601-11	RES, ADJ, CARBON 22K
RV52	1-238-601-11	RES, ADJ, CARBON 22K

< CONNECTOR >

TP51	* 1-564-336-00	PIN, CONNECTOR 2P (AEP, UK)
TP51	* 1-568-449-11	HOUSING, CONNECTOR (PC BOARD) 3P (G, IT)

< CRYSTAL >

X21	1-577-126-11	VIBRATOR, CRYSTAL
X51	1-577-075-11	OSCILLATOR, CERAMIC 456kHz

****

Ref. No.	Part No.	Description	Remark
		MISCELLANEOUS	
		**********	
5	1-590-907-11	WIRE, FLAT TYPE (20 CORE)	
6	1-590-908-11	WIRE, FLAT TYPE (20 CORE)	
52	1-590-906-11	WIRE, FLAT TYPE (19 CORE)	
59	1-690-035-11	WIRE, FLAT TYPE (19 CORE)	
120	1-590-530-11	WIRE, FLAT TYPE	
156	⚠ 8-848-144-11	DEVICE, OPTICAL KSS-240A	
157	1-575-001-11	WIRE, FLAT TYPE (12 CORE)	
F901	⚠ 1-532-078-00	FUSE, TIME-LAG T1A	
M101	X-4917-523-3	MOTOR ASSY (SPINDLE)	
M102	X-4917-504-1	MOTOR ASSY (SLED)	
M291	A-4608-362-A	MOTOR (L) ASSY	
T1	⚠ 1-450-412-11	TRANSFORMER, POWER	

****

HARDWARE LIST

# 1	7-621-255-25	SCREW +PTT 2X4 (S)
# 2	7-685-646-79	SCREW +BVTP 3X8 TYPE2 N-S
# 3	7-685-647-79	SCREW +BVTP 3X10 TYPE2 N-S
# 4	7-682-547-04	SCREW +BVTT 3X6 (S)
# 5	7-685-650-79	SCREW +BVTP 3X16 TYPE2 IT-3
# 6	7-685-659-79	SCREW +BVTP 4X8 TYPE2 IT-3
# 7	7-685-234-19	SCREW +KTP 2.6X8 TYPE2NON-SLIT
# 8	7-685-646-79	SCREW +BVTP 3X8 TYPE2 N-S
# 9	7-621-775-10	SCREW +B 2.6X4
#10	7-624-105-04	STOP RING 2.3, TYPE -E
#11	7-685-134-19	SCREW +BTP 2.6X8 TYPE2 N-S
#12	7-621-255-15	SCREW +P 2X3
#13	7-682-947-01	SCREW +PSW 3X6 (FORMER TYPE)
#14	7-682-547-09	SCREW +B 3X6 (FORMER TYPE)
#15	7-685-872-01	SCREW +BVTT 3X8

Note: The components identified by mark ⚠ or dotted line with mark ⚠ are critical for safety.
Replace only with part number specified.

Sony Corporation
Audio Group

English
91F1858-1
Printed in Japan
©1991.6
Published by Customer Relations and Service Group

9-956-341-11